DOMETIC

AWNINGS
SLIDE TOPPER

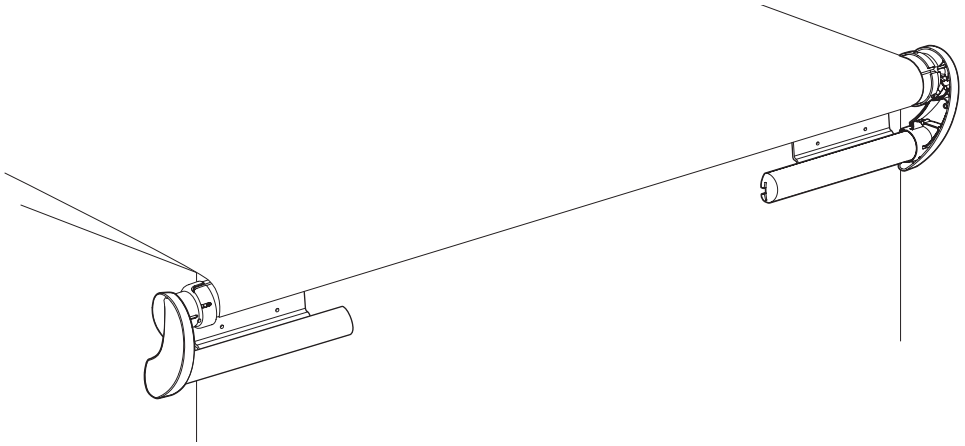

Hardware: 98000(LL).40(Y)(#)
Fabric Roller Tube Assembly: 98(X)0(Z)(YY).(LLL)(#)

EN **Slide Topper**
Installation and Operation Manual 2

REVISION G Form No. 4445105167 3314719.000 2026-02-18

Service center & dealer locations
Visit: www.dometic.com

Please read these instructions carefully and follow all instructions, guidelines, and warnings included in this product manual in order to ensure that you install, use, and maintain the product properly at all times. These instructions MUST stay with this product.

By using the product, you hereby confirm that you have read all instructions, guidelines, and warnings carefully and that you understand and agree to abide by the terms and conditions as set forth herein. You agree to use this product only for the intended purpose and application and in accordance with the instructions, guidelines, and warnings as set forth in this product manual as well as in accordance with all applicable laws and regulations. A failure to read and follow the instructions and warnings set forth herein may result in an injury to yourself and others, damage to your product, or damage to other property in the vicinity. This product manual, including the instructions, guidelines, and warnings, and related documentation, may be subject to changes and updates. For up-to-date product information, please visit www.dometic.com.

Contents

1 Explanation of Symbols and Safety Instructions 2
1.1 Recognize Safety Information 2
1.2 Understand Signal Words 2
1.3 Supplemental Directives 3
1.4 General Safety Messages 3
2 General Information 3
2.1 Finding Tools and Materials 3
2.2 Identifying the Model 4
3 Pre-Installation 5
3.1 Extending the Slide-Out Room 5
3.2 Identifying the Required Clearances 5
3.3 Identifying the Bracket Configuration 6
3.4 Using an Optional Mounting Bracket Spacer . 7
3.5 Marking the Mounting Bracket Location 7
3.6 Preparing the Hardware Assembly 8
4 Installation 8
4.1 Installing the Awning Rail and the Fabric 9
4.2 Installing the Mounting Brackets 10
4.3 Installing the Anti-Billow Stop 11
4.4 Securing the Awning Fabric to the Awning Rail 12
5 Operation 13
6 Maintenance 13
6.1 Maintaining the Hardware 14
6.2 Maintaining the Fabric 14
7 Troubleshooting 14
8 Disposal 15
LIMITED ONE-YEAR WARRANTY 15

Related Documents

Find the installation manual in French online at
http://qr.dometic.com/beBlcs

1 Explanation of symbols and safety instructions

This manual has safety information and instructions to help you eliminate or reduce the risk of accidents and injuries.

1.1 Recognize safety information

⚠ **This is the safety alert symbol.** It is used to alert you to potential physical injury hazards. Obey all safety messages that follow this symbol to avoid possible injury or death.

1.2 Understand signal words

A signal word will identify safety messages and property damage messages, and also will indicate the degree or level of hazard seriousness.

⚠ **DANGER!**
Indicates a hazardous situation that, if **not** avoided, will result in death or serious injury.

⚠ **WARNING**
Indicates a hazardous situation that, if **not** avoided, could result in death or serious injury.

⚠ CAUTION
Indicates a hazardous situation that, if **not** avoided, could result in minor or moderate injury.

NOTICE: Used to address practices **not** related to physical injury.

Indicates additional information that is **not** related to physical injury.

1.3 Supplemental directives

To reduce the risk of accidents and injuries, please observe the following directives before proceeding to install or operate this appliance:

- Read and follow all safety information and instructions.
- Read and understand these instructions before installing this product.
- The installation must comply with all applicable local or national codes, including the latest edition of the following standards:

  U.S.A.

  – ANSI/NFPA70, National Electrical Code (NEC)
  – ANSI/NFPA 1192, Recreational Vehicles Code
  – ANSI Z21.57, Recreational Vehicles Code

  Canada

  – CSA C22.1, Parts I & II, Canadian Electrical Code
  – CSA Z240 RV Series, Recreational Vehicles

1.4 General safety messages

⚠ WARNING: FIRE, IMPACT, AND/OR CRUSH HAZARD. Failure to obey the following warnings could result in death or serious injury:

- Use only Dometic replacement parts and components that are specifically approved for use with the appliance.
- Avoid improper installation of the Slide Topper. Installation and maintenance must be done by a qualified service person only.
- Do **not** modify this product in any way. Modification can be extremely hazardous.
- Use care when diagnosing and/or adjusting components on a powered unit.
- Keep sources of heat and fire (barbecue grills, portable heaters, etc.) away from the Slide Topper.
- Do **not** allow children to play with this product or with fixed controls (if applicable).
- Do **not** allow anyone (including children) with reduced physical, sensory or mental capabilities, or lack of experience and knowledge to use this product, unless they have been given supervision or instruction concerning the use of this product by a person responsible for their safety.
- Never leave an open Slide Topper unattended. Keep it stowed (closed) when snow, heavy rain, wind, and severe weather conditions are expected.

⚠ CAUTION: PINCH HAZARD.
Maintain a horizontal distance of at least 16 in. (407 mm) between the fully opened Slide Topper and any permanent object. Failure to obey this caution could result in minor or moderate injury.

Do **not** face the slide-out room or Slide Topper toward permanent objects that my interfere with the operation.

2 General information

The images used in this document are for reference purposes only. Components and component locations may vary according to specific product models. Measurements may vary ±0.38 in. (10 mm).

2.1 Finding tools and materials

Refer to the following tables for the included, required, and optional hardware and kits available for the Slide Topper.

Included Hardware	Quantity
Left Hand Topper Arm with 15 in. (38 cm) or 18 in. (46 cm) Extension (Bar)	1
Right Hand Topper Arm with 15 in. (38 cm) or 18 in. (46 cm) Extension (Bar)	1
Cotter R-Pin	2
#10 - 12 x 1 in. Screw	12
#8 - 18 x 3/8 in. Screw	6
#6 - 20 x 7/16 in. Self-Drilling Screw	2

Included Anti-Billow Bracket Kit	Quantity
Anit-Billow Stop	1
#10 - 16 x 3/4 in. Screw	2
Anit-Billow Bracket	1
Anit-Billow Spacer	1
#10 - 12 X 3/4 in. Screw	3
3/16 in. X 3/8 in. Oscar Rivet	2

Required Topper Bracket Set[1]	Part Number	Quantity
Topper Tall (Wall) Bracket with Hardware	98000(LL).401(#)	2
Topper Short (Wall) Bracket with Hardware	98000(LL).402(#)	2

[1] A Topper bracket set (not included) is required. Choose the set that permits the minimum clearances to be met for your specific application.

Slide Toppers that are 198 in. (503.0 cm) to 259 in. (657.9 cm) require the following kits:

- A second anti-billow stop kit (one at each end cap)
- A second anti-billow bracket kit (one at each end cap)
- One (1) cradle kit for center support of the Fabric Roller Tube Assembly (FRTA)

In addition to the above, it is recommended that Slide Toppers that are 260 in. (660.4 cm) or wider install a second cradle kit.

Optional Kits	Part Number	Quantity
Mounting Bracket Spacer Kit 0.75 in. (19 mm) thick	3107940.003	1
Mounting Bracket Spacer Kit 0.50 in. (13 mm) thick	3310066.000#	1
Anti-Billow Stop Kit	3109252.XXX#	1
Anti-Billow Bracket Kit	3107198.XXX#	1

Optional Kits	Part Number	Quantity
Cradle Kit	3309526.XXX#	1

Optional Components	Part Number	Quantity
Awning Rail	3106774.XXX-#	1
Awning Rail 20 ft. (6.1 m) (20 pack)	3106774.262-#	1
Oscar Rivet (10 pack)	113008P10	1
Oscar Rivet (100 pack)	113008P100	1

Recommended Tools	
Drill	Flat Screwdriver
3/16 in. (4.7 mm) Drill Bit	7/16 in. (11 mm) Drill Bit
Sealant	File
Measuring Tape	

2.2 Identifying the model

This section describes the breakdown of the model identification numbers.

Hardware

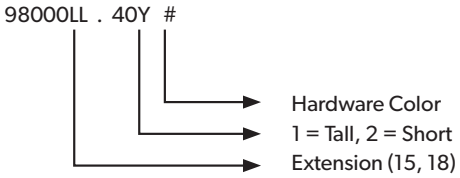

FRTA

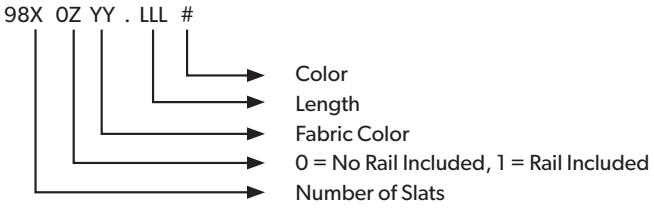

Intended use

This Slide Topper is designed and intended for use on a recreational vehicle (hereinafter referred to as "RV"). Use these instructions to ensure the correct installation and function of the product.

The manufacturer accepts no liability for damage in the following cases:

- Faulty assembly or connection
- Damage to the product resulting from mechanical influences and excess voltage
- Alterations to the product without express permission from the manufacturer
- Use for purposes other than those described in the operating manual

Dometic Corporation reserves the right to modify appearances and specifications without notice.

3 Pre-installation

Use this section to mark the location of the mounting brackets that were selected for the installation of the Slide Topper and prepare the hardware for assembly.

3.1 Extending the slide-out room

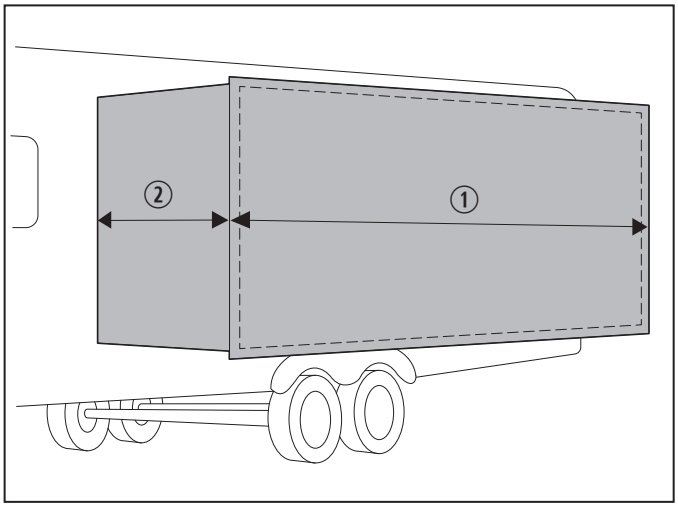

1 RV Slide-Out Room Extension

① Slide-Out Room Width (including Flange)
② Slide-Out Room Maximum Extension

Begin by extending the slide-out room. The full extension of the slide-out room must not exceed 42 in. (106.7 cm).

Refer to the Slide Topper Application Guide (located on dometic.com) to determine the appropriate Slide Topper width for the slide-out room application and to select the fabric, mounting brackets, and optional spacers needed for the installation of the Slide Topper.

3.2 Identifying the required clearances

NOTICE: Employ as steep of a pitch as possible for the awning fabric without exceeding the maximum distance required between the awning rail and mounting bracket (refer to Figure 2 and Figure 3). Exceeding the maximum distance exposes the awning fabric to wind, causing the fabric to billow or tear.

Use this section to confirm your Slide Topper clearance measurements.

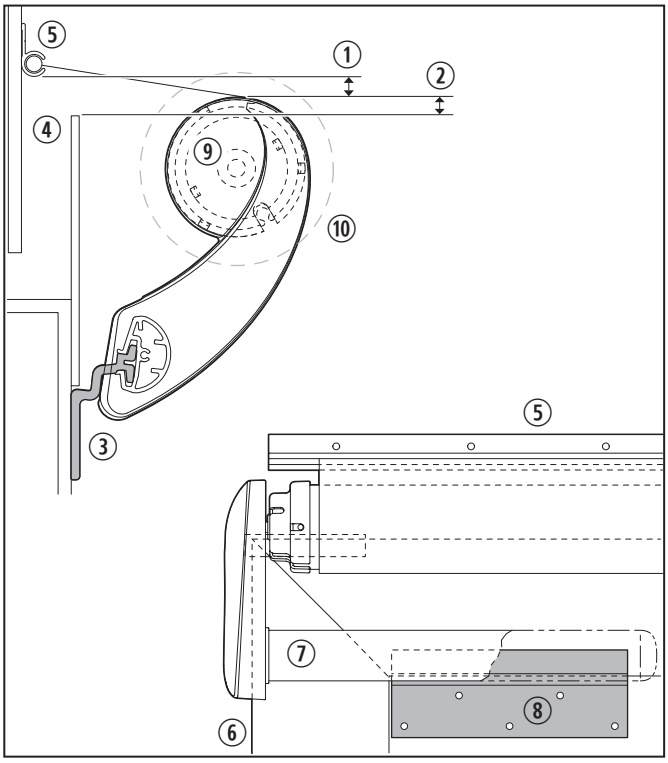

2 Tall Mounting Bracket Clearance

① 0.5 in. (1.3 cm) min. – 4 in. (10 cm) max.
② 0.25 in. (0.6 cm) min.
③ Mounting Bracket
④ Slide-Out Room Flange
⑤ Awning Rail
⑥ Slide-Out Room Flange
⑦ Extension
⑧ Mounting Bracket
⑨ Rotating Assembly
⑩ 0.5 in. (1.3 cm) min.

* Callout 10 represents the minimum clearance required between the Slide Topper rotating assembly, all obstructions on the RV slide-out room, and all obstructions on the stationary wall.

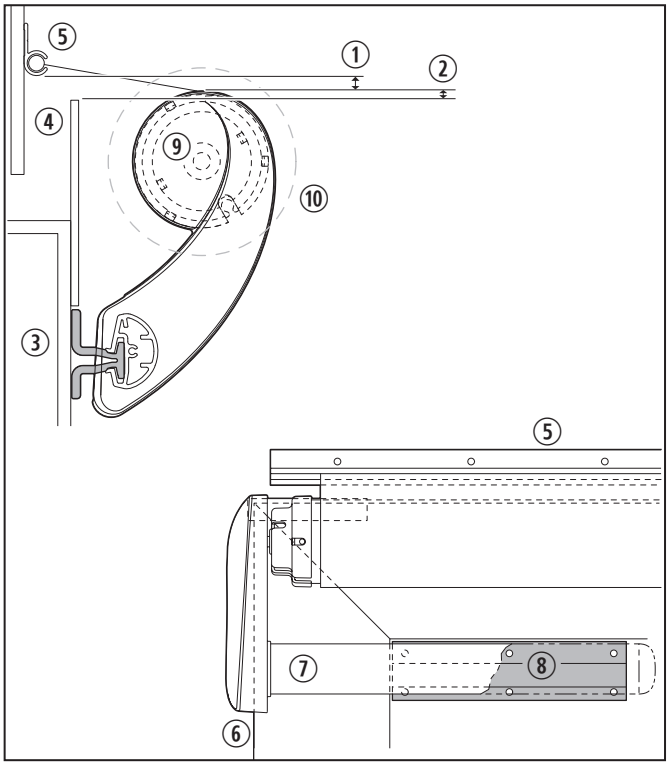

3 Short Mounting Bracket Clearance

① 0.5 in. (1.3 cm) min. – 4 in. (10 cm) max.	⑥ Slide-Out Room Flange
② 0.25 in. (0.6 cm) min.	⑦ Extension
③ Mounting Bracket	⑧ Mounting Bracket
④ Slide-Out Room Flange	⑨ Rotating Assembly
⑤ Awning Rail	⑩ 0.5 in. (1.3 cm) min.

* Callout 10 represents the minimum clearance required between the Slide Topper rotating assembly, all obstructions on the RV slide-out room, and all obstructions on the stationary wall.

Confirm the identified clearances. In addition, the Slide Topper must have a 0.5 in. (1.3 cm) minimum clearance between the Slide Topper rotating assembly, all obstructions on the RV slide-out room, and all obstructions on the stationary wall. Optional bracket spacers may be used to achieve this clearance.

3.3 Identifying the bracket configuration

Use this section to identify the Slide Topper configuration of your application.

If the slide-out room of the RV has extra large flanges, mount the brackets directly onto the flange only if it provides a solid structural support. Never mount brackets on an unsupported area of the flange or on the awning rail.

Some models come with the extensions not installed on the arms.

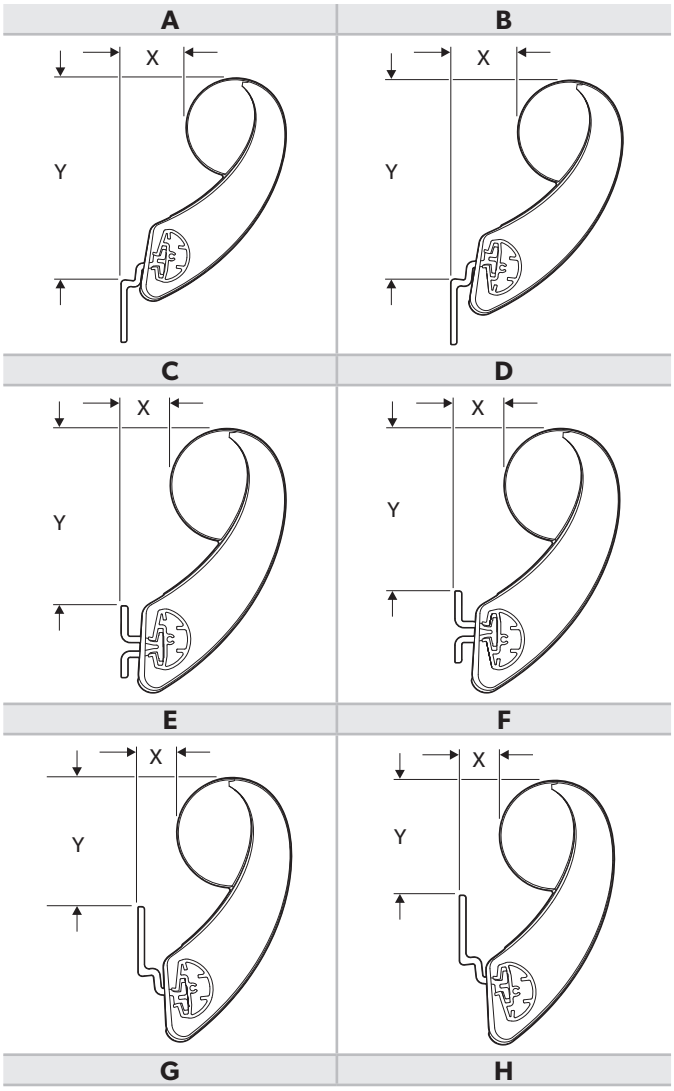

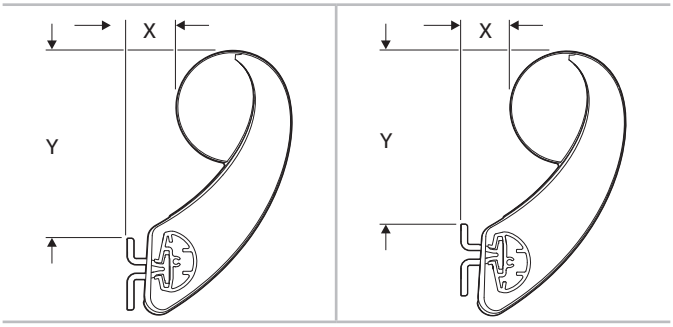

Ref.	Bracket	Position	Extension Position	Dimension Specifications (X)	(Y)
A	Tall	Standard	Standard	1.79 in. (4.5 cm)	5.33 in. (13.5 cm)
B	Tall	Standard	Inverted	1.83 in. (4.6 cm)	5.70 in. (14.5 cm)
C	Short	Standard	Standard	1.21 in. (3.1 cm)	4.01 in. (10 cm)
D	Short	Standard	Inverted	1.21 in. (3.1 cm)	4.38 in. (11 cm)
E	Tall	Inverted	Standard	1.02 in. (2.6 cm)	2.91 in. (7.4 cm)
F	Tall	Inverted	Inverted	0.98 in. (2.5 cm)	3.27 in. (8.3 cm)
G	Short	Inverted	Standard	1.21 in. (3.1 cm)	4.26 in. (11 cm)
H	Short	Inverted	Inverted	1.21 in. (3.1 cm)	4.63 in. (12 cm)

3.4 Using an optional mounting bracket spacer

When the RV slide-out room flange has special features like a large curve, or the flange is recessed into the RV wall, use a mounting bracket spacer (not included).

The mounting bracket spacer thickness may vary depending on the spacer kit requirements.

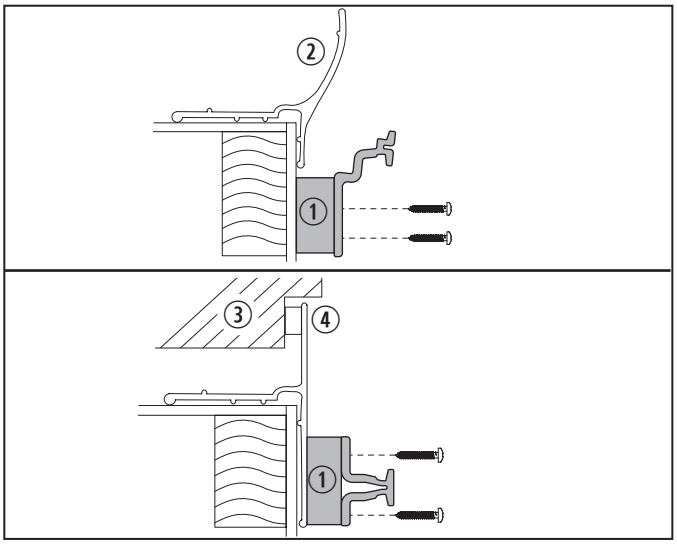

4 Optional Mounting Bracket Spacer

① 0.5 in. or 0.75 in. (1.3 cm or 2.0 cm) Mounting Bracket Spacer (size may vary)

② Large Curve in Flange

③ RV Wall

④ Recessed Flange

3.5 Marking the mounting bracket location

Use this section to mark the location of the mounting brackets that were selected for the installation of the Slide Topper.

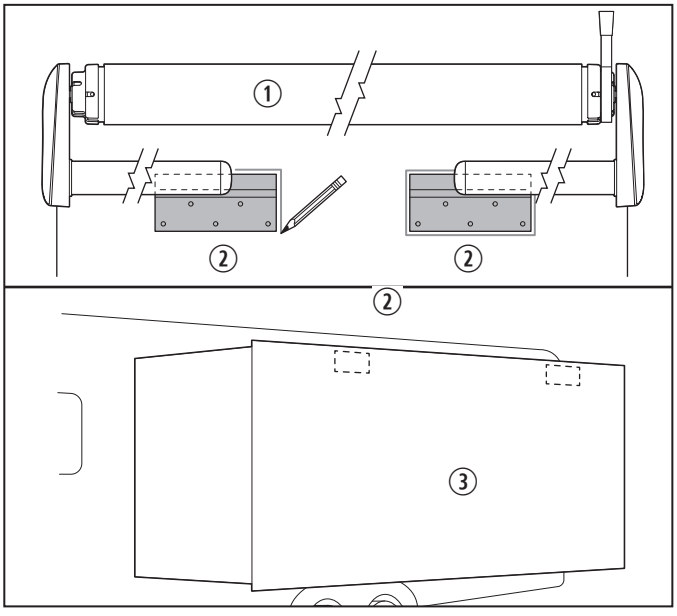

5 Mounting Brackets

① Fabric Roller Tube Assembly
② Mounting Bracket
③ Slide-Out Room

1. Find a solid structure in the RV slide-out room wall for support of the mounting brackets.
2. Mark the spacing for the mounting brackets. The spacing should be centered on the RV slide-out room.

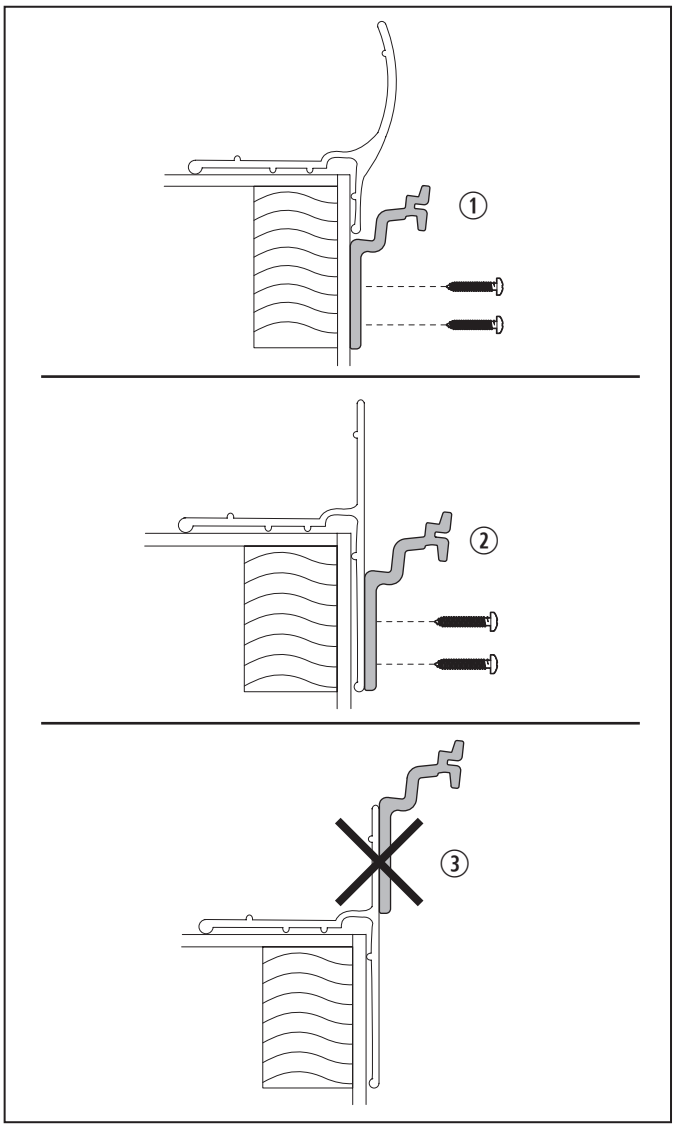

6 Mounting Bracket Locations

① Mounting Bracket Below Flange
② Mounting Bracket Directly on Flange
③ Incorrect Mounting Bracket Location

3. Verify the mounting location is flat and has solid structural backing where the fasteners will penetrate the surface.
4. Verify the mounting brackets are positioned at the correct height in relation to the Slide Topper arms and extension.
5. Mark the hole locations for the mounting brackets using the mounting brackets as templates.

3.6 Preparing the hardware assembly

Use this section to prepare the hardware for the installation of the Slide Topper.

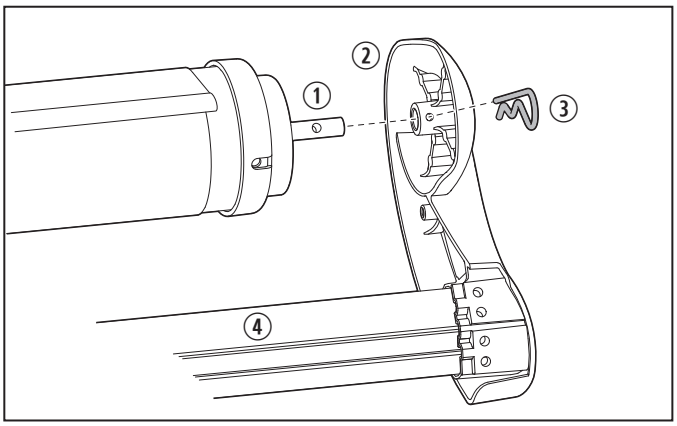

7 Rear View of Hardware Assembly

① Torsion Rod
② LH Arm
③ Cotter R-Pin
④ Extension

1. Carefully lay the FRTA onto a clean, well padded "V" trough (or other well protected surface) to prevent fabric damage.
2. If the extensions are not installed on the arms:
   a. Secure the extension to the LH arm with 3 18X0.63, PH, #2 SQ drive screws.
   b. Torque to 15 in-lb (1.7 Nm).
   c. Repeat steps a – b for the other end.
3. Place the LH (left hand) arm onto the torsion rod.
4. Align the clip holes.
5. Install the cotter R-pin through the LH arm and into the torsion rod until it securely snaps into place.

6. Repeat steps 3 – 5 for the other end.

Make sure the LH and RH (right hand) arms align correctly with each other.

4 Installation

WARNING: FIRE OR ELECTRICAL SHOCK HAZARD. Failure to obey these warnings could result in death or serious injury.

- Make sure there are no obstacles like wires or pipes in the way of the drill locations.
- Disconnect the 120 VAC power supply from the RV before drilling or cutting into the RV.
- Disconnect the positive (+) 12 VDC terminal from the supply battery before drilling or cutting into the RV.

WARNING: EXPLOSION HAZARD.
Shut off the gas supply in the RV before drilling or cutting into the RV. Failure to obey this warning could result in death or serious injury.

WARNING: IMPACT OR CRUSH HAZARD.
Make sure the mounting surface of the RV is flat, has a solid structural back where the fasteners penetrate the surface, and will safely and securely support the product. The product may become unstable and could detach, bend, or collapse. Failure to obey this warning could result in death or serious injury.

NOTICE: Review the following notices prior to beginning installation:

- Always seal against weather and moisture where components enter the RV's walls, roof, or floor. If this is ignored, water intrusion can occur.
- Before installing the awning fabric, make sure the awning rail is parallel to the RV floor and is **not** warped or curved. If the awning rail is **not** straight, awning the awning fabric may wrinkle or stretch.
- At least one other person is required to help hold and control the Slide Topper until the mounting brackets are installed onto the RV and the FRTA, with the arms and extensions, is installed on the mounting brackets. Failure to control the Slide Topper at this point can result in product damage.
- The cotter pins must be removed from the Slide Topper end caps before operating the slide-out room. Failure to remove the cotter pins before operation can result in product damage.

This section provides the information needed to install the Slide Topper.

4.1 Installing the awning rail and the fabric

Use the following steps for the installation of the awning rail and the fabric.

1. Determine the awning rail location relative to the mounting bracket and slide-out room flange.
2. Remove any flashing or drip shields that will interfere with the Slide Topper.

The Slide Topper may be assembled and held in place to check for interference.

3. Apply sealant to the back edge of the awning rail and to the #8 – 18 x 1 in. screws.
4. Place the awning rail in the mounting location.
5. Tighten the screws through the awning rail and into a solid surface to secure the awning rail.

Some models do not include the rail and screws. If an awning rail and screws are needed, refer to "Finding tools and materials" on page 3.

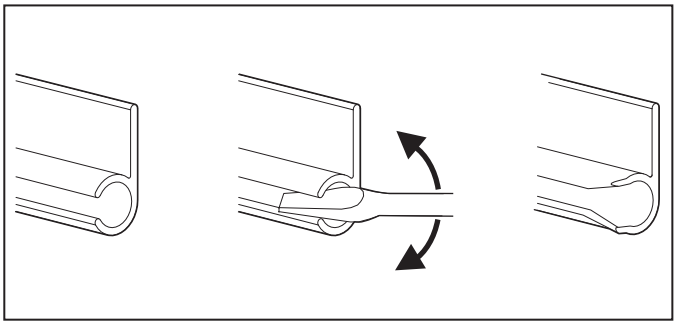

8 Widening the Awning Rail

6. Select the desired awning rail end in which the awning fabric will be inserted.
7. Widen the end of the rail with a flat screwdriver and file off any sharp edges.

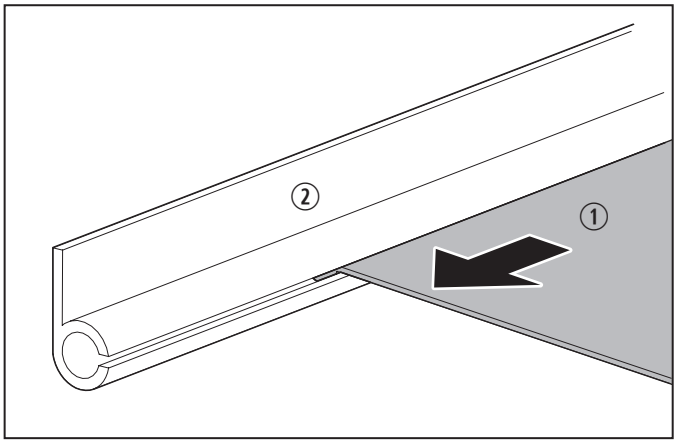

9 Guiding the Awning Fabric Through the Awning Rail

① Awning Fabric ② Awning Rail

8. Unfurl the awning fabric one revolution to allow enough room between the wall and the awning hardware to guide the fabric into the awning rail.

Unfurling the awning fabric more than one revolution of fabric can cause issues with the awing function.

9. With the slide-out room of the RV completely closed, carefully lift the Slide Topper to the installed awning rail end above the top of the slide-out.

10. While one person guides the awning fabric (or awning roller cover, if applicable) into the awning rail, carefully slide the Slide Topper until the fabric is in the desired position.

A stepladder may be necessary to guide the fabric.

4.2 Installing the mounting brackets

1. Drill a 3/16 in. (0.12 cm) [7/32 in. (0.56 cm) if you are drilling into steel] hole approximately 1 in. (2.5 cm) deep into the slide-out room on the marked hole locations.
2. Apply sealant to the provided #10 - 12 x 1 in. screws.
3. Place the mounting brackets onto the marked locations on the RV slide-out room.
4. Tighten the screws through the mounting bracket and into the solid structure of the RV slide-out room.

If an optional spacer kit is needed, use the #10 x 1.75 in. screws provided with the kit. Use the 3/16 x 1 in. oscar rivets when installing the mounting brackets onto laminated walls.

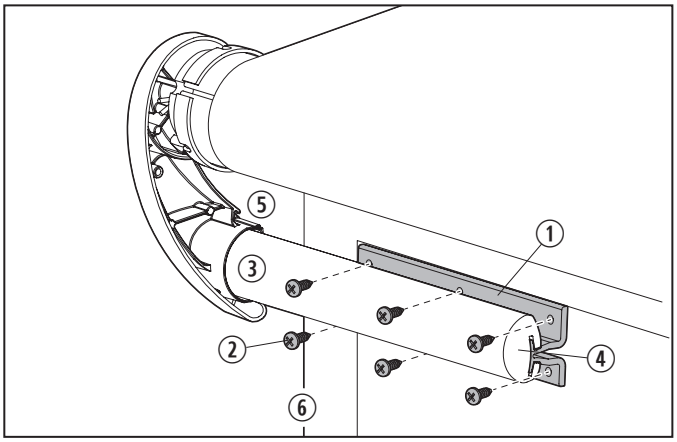

10 Securing the Mounting Bracket

① Mounting Bracket ④ Extension Cap
② #10 - 12 x 1 in. Screw ⑤ LH Arm
③ Extension ⑥ Slide-Out Room

5. Repeat steps 1 – 5 for the other mounting bracket.

   Do not allow the mounting brackets to extend more than half their length beyond the end of the extension bar. At least 50% of the mounting bracket length must be inserted into the extension.

6. Center the Slide Topper on the RV slide-out room.

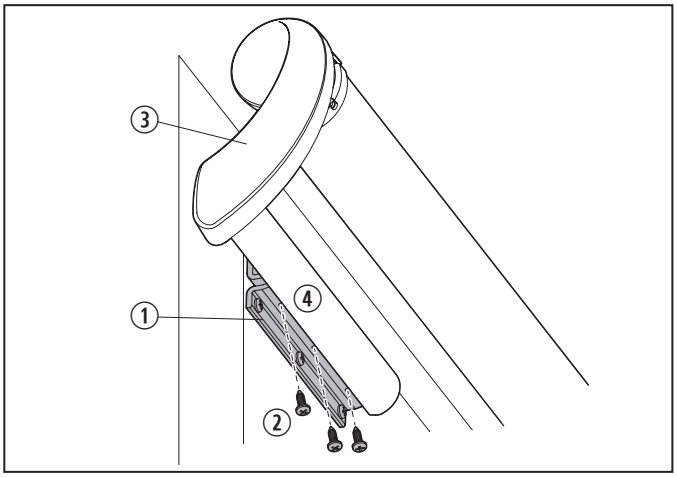

11 Securing the Extension to the Mounting Bracket

① Mounting Bracket ③ LH Arm
② #8 – 18 x 3/8 in. Screw ④ Extension

7. Insert the provided #8 – 18 x 3/8 in. screws into the mounting brackets.
8. Clamp the Slide Topper extensions onto the mounting brackets.

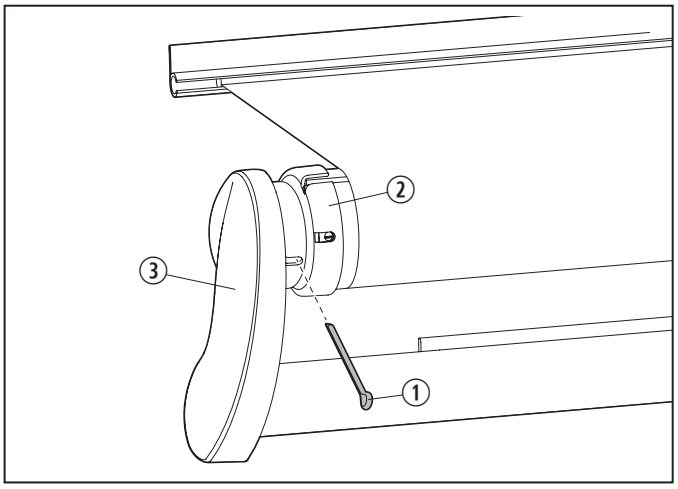

12 Removing the Cotter Pin

① Cotter Pin
② End Cap
③ LH Arm

WARNING: IMPACT OR PINCH HAZARD.
Do **not** remove the cotter pin from the torsion rod until the awning fabric is attached to the awning rail, the torsion rod is secured to the assembled hardware, and the hardware is secured to the slide-out room. Rapid casting spin off will occur. Spring tension will attempt to spring the hardware and/or the fabric roller tube quickly and unexpectedly. Failure to obey this warning could result in death or serious injury.

9. Remove and discard the cotter pin from the LH torsion rod at the LH end cap.

   Removing the cotter pin will release factory preset tension. To facilitate removal, rotate the fabric roller tube by pulling the bottom of the tube forward while pulling on the cotter pin.

10. Repeat step 9 for the RH end.

4.3 Installing the anti-billow stop

This section provides the information needed to install the anti-billow stop.

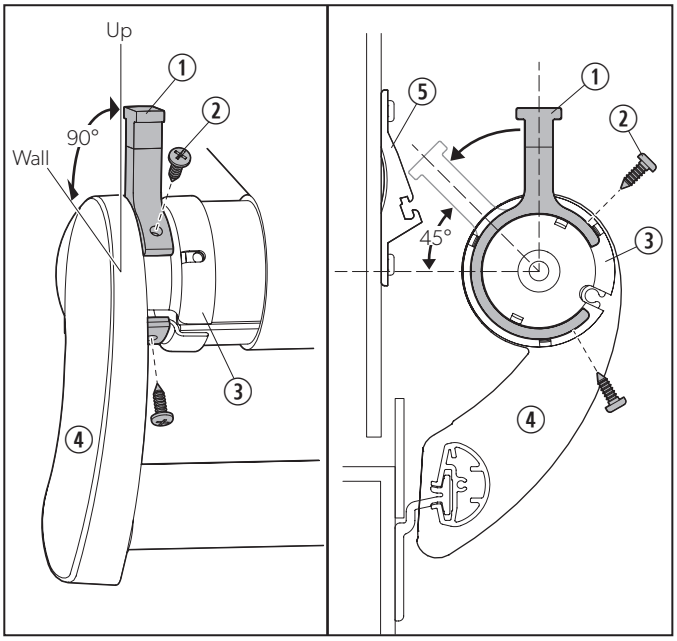

13 Installing and Positioning the Anti-Billow Stop

① Anti-Billow Stop Bumper
② #10 Self-Drilling Screw
③ End Cap
④ LH Arm
⑤ Anti-Billow Bracket

1. Determine onto which end cap the anti-billow stop will be installed.

Slide Toppers 198 in. (503 cm) or wider require an anti-billow stop at both end caps and a cradle kit for the center support. Refer to "Finding tools and materials" on page 3.

2. Place the anti-billow stop onto the end cap with the opening facing away from the awning rail.
3. Position the anti-billow stop with the bumper pointed straight up.
4. Tape the anti-billow stop in place on the end cap.

If either screw hole in the anti-billow stop interferes with the existing holes or openings in the end cap, rotate the anti-billow stop no more than 30° from the vertical position away from the RV wall.

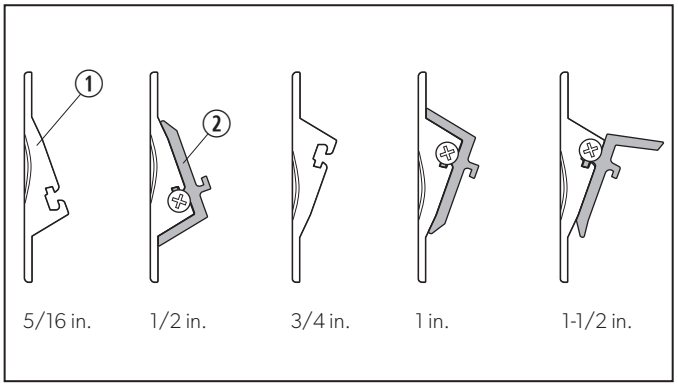

14 Configurations for the Anti-Billow Bracket and Spacer

① Anti-Billow Bracket ② Anti-Billow Spacer

5. Determine the required configuration of the anti-billow bracket and the spacer (spacing from the RV wall) to ensure the anti-billow stop will not rotate past a 45° angle toward the RV wall.

   The anti-billow bracket and anti-billow spacer can be configured for a spacing range of 0.31 in. to 1.5 in. (0.78 cm to 4 cm).

6. Using the correct spacing configuration, position the anti-billow bracket and anti-billow spacer onto the RV wall.

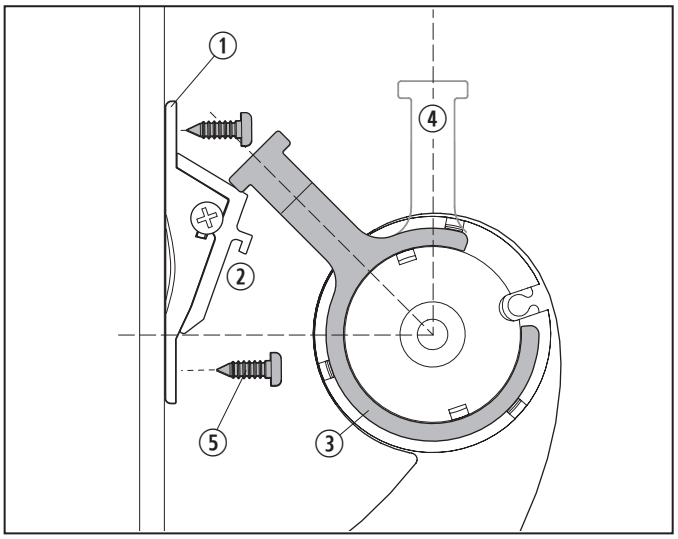

15 Securing the Anti-Billow Bracket

① Anti-Billow Bracket ④ Up (Resting Position)

② Anti-Billow Spacer ⑤ #10 – 12 x 3/4 in. Screw

③ Anti-Billow Stop

7. Tape the bracket and spacer in place.

8. Verify the anti-billow stop will clear the anti-billow bracket as the slide-out room opens. Make adjustments as necessary.

9. Place and tighten the provided #10 self drilling screws through the anti-billow stop and into the end cap.

Do **not** move the anti-billow stop or scratch the end cap while installing the screws.

10. Place and tighten the provided #10 – 12 x 3/4 in. screws through the anti-billow bracket and into the solid structure on the RV.

    If installing the anti-billow bracket onto fiberglass, use the proper oscar rivets (not provided) instead of the screws. Refer to "Finding tools and materials" on page 3.

11. Remove the tape from the anti-billow stop, end cap, and anti-billow bracket.

12. Repeat steps 1 – 11 for the second anti-billow stop (if applicable) on the other end cap.

4.4 Securing the awning fabric to the awning rail

1. Verify the cotter pins have been removed from the end caps.

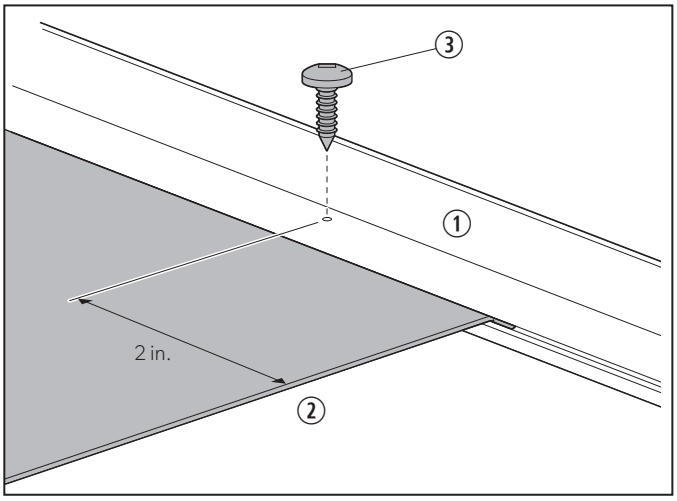

16 Securing the Awning Fabric

① Awning Rail ③ #6 x 7/16 in. Screw

② Fabric Edge

2. Open and close the RV slide-out room four or five times to allow natural self adjustment of the awning fabric. Refer to the RV operators manual for instructions on how to operate the RV slide-out room.
3. Verify the alignment of the awning fabric. If the awning fabric is misaligned, adjust the arm extensions:
   a. Loosen the clamping screws.
   b. Move the extension accordingly.
   c. Retighten the screws.
   d. Cycle the RV slide-out room again to check proper alignment.

4.4.1 Securing slide toppers with metal slats

Use this section for securing the awning fabric to the awning rail if the Slide Topper has metal slats.

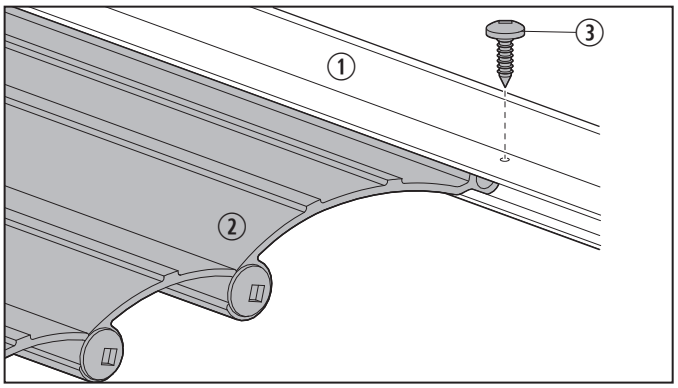

17 Securing the Metal Slide Topper

① Awning Rail
② Top Slat
③ #6 x 7/16 in. Screw

Install the #6 x 7/16 in. screw immediately next to the metal hinge on each end of the awning rail.

4.4.2 Securing slide toppers without metal slats

Use this section for securing the awning fabric to the awning rail if the Slide Topper does not have metal slats.

1. Mark the location of the awning fabric.
2. Pull one edge of the awning fabric approximately 0.25 in. (0.64 cm) beyond the marked position.
3. Secure the awning fabric using the #6 x 7/16 in. screws.
4. Tighten the screws through the awning rail approximately 2 in. (5 cm) from the edge of the fabric.
5. Stretch the opposite edge of the awning fabric approximately 0.75 in. (2 cm).
6. Secure the fabric using the #6 x 7/16 in. screws.
7. Tighten the screws through the awning rail approximately 2 in. (5 cm) from the edge of the fabric.

5 Operation

CAUTION: PINCH HAZARD.

Do **not** operate the RV slide-out room or Slide Topper if people or objects are in the travel path of the RV slide-out room. Failure to obey this caution could result in minor or moderate injury.

NOTICE: Do **not** close the RV slide-out room or the Slide Topper with leaves, sticks, or other debris on the awning fabric. Damage to the fabric or Slide Topper can occur.

If the RV slide-out room is left open during rainy conditions, water may collect on the Slide Topper. This will cause water to spill over the sides as the RV slide-out room closes and the Slide Topper closes.

The Slide Topper automatically opens and closes as the RV slide-out room opens and closes. Refer to the RV operator's manual for information on operating the RV slide-out room.

6 Maintenance

WARNING: FIRE, IMPACT, AND/OR CRUSH HAZARD.

Frequently examine the product for imbalance (uneven fit/sagging/loose parts), signs of wear or damage to wiring (if applicable), and other critical parts. Critical parts include awning fabric, brackets, and arm assemblies, etc. Do **not** use product if adjustments or repairs are necessary. Failure to obey the following warnings could result in death or serious injury.

NOTICE: Refer to the following precautions to ensure product damage or deterioration does not occur:

- Do **not** use insecticides or other sprays near the awning fabric. These could cause stains and adversely affect the fabric's ability to repel water.
- Do **not** expose the Slide Topper to adverse environmental conditions, corrosive agents, or other harmful conditions.
- Never close the Slide Topper for storage when it is wet. The combination of moisture and dirt could result in mildew, discoloration, and stains.
- If it is necessary to temporarily roll up the Slide Topper while it is wet, make sure you roll it out and let it dry (as soon as conditions allow) before rolling it up again.
- Never close the Slide Topper if you have applied a vinyl liquid patch (VLP) and it is wet. Damage to other parts of the awning fabric will occur.
- Do **not** use strong chemicals or abrasives to clean parts as their protective surfaces will be damaged.
- Do **not** use silicone sprays near labels. The labels adhesive bond to the product surfaces could weaken.
- Do **not** use abrasive or corrosive cleaners, mildew removers, or hard bristle brushes on the awning fabric.
- Do **not** allow dirt, leaves, or other debris to accumulate on the Slide Topper. This could cause abrasions and stains. Mildew could grow on the dirt and organic debris causing permanent discoloration, stains, and odors on the awning fabric.

The Slide Topper fabric and hardware require regular maintenance. Refer to these sections for maintenance instructions.

6.1 Maintaining the hardware

Perform the following maintenance checks on the Slide Topper hardware regularly:

- Clean the Slide Topper hardware as needed with a mild surface cleaner.
- Apply silicone spray lubricant as needed to keep the FRTA's moving parts operating smoothly.

6.2 Maintaining the fabric

Vinyl fabric offers the advantage of durability and water resistance.

Wrinkling is a normal characteristic of vinyl. Wrinkling may be more noticeable when retracted, and after prolonged periods of stowage.

Leave the Slide Topper open during warm weather to minimize the wrinkling over a period of time.

6.2.1 Cleaning the fabric

Perform the following actions to clean the awning fabric:

1. Mix one quarter of a cup of dish soap and one quarter of a cup of bleach with five gallons of fresh water to use as cleaning solution.
2. Drench the open awning fabric with the cleaning solution.
3. Close the awning and let it soak for five minutes.
4. Open the awning.
5. Thoroughly rinse off the top and bottom of the awning fabric with clean water. Completely remove the cleaning solution from the awning fabric. Bleach will degrade the awning fabric if it is not completely removed from the awning fabric.
6. Repeat step five as necessary to completely remove the cleaning solution from the awning fabric.
7. Allow the Slide Topper to thoroughly dry before stowing.

6.2.2 Repairing the fabric

To repair a pinhole or a spot where the coating has flaked off the top layer of the vinyl fabric, perform the following actions:

1. Apply a small dab of VLP (vinyl liquid patch) onto the tip of a cotton swab.

VLP is available from Dometic. Reference part number 3314216.000 for ordering.

2. Gently roll the cotton swab around the pinhole. The VLP will melt the coating and quickly fill the pinhole blending with all colored vinyls.
3. Allow the VLP to thoroughly dry before stowing.

7 Troubleshooting

If malfunctions occur that cannot be corrected by reviewing these instructions, contact a qualified service technician.

It is normal for some drips, condensation, or windblown precipitation to enter under the Slide Topper canopy.

8 Disposal

Place the packaging material in the appropriate recycling waste bins, whenever possible. Consult a local recycling center or specialist dealer for details about how to dispose of the product in accordance with all applicable national and local regulations.

LIMITED ONE-YEAR WARRANTY

LIMITED ONE-YEAR WARRANTY AVAILABLE AT WWW.DOMETIC.COM/WARRANTY.

IF YOU HAVE QUESTIONS, OR TO OBTAIN A COPY OF THE LIMITED WARRANTY FREE OF CHARGE, CONTACT:

DOMETIC CORPORATION
CUSTOMER SUPPORT CENTER
1120 NORTH MAIN STREET
ELKHART, INDIANA, USA 46514
1-800-544-4881 OPT 1

Copyright

© 2023 Dometic Group. The visual appearance of the contents of this manual is protected by copyright and design law. The underlying technical design and the products contained herein may be protected by design, patent or be patent pending. The trademarks mentioned in this manual belong to Dometic Sweden AB. All rights are reserved.

DOMETIC

dometic.com

YOUR LOCAL DEALER

dometic.com/dealer

YOUR LOCAL SUPPORT

dometic.com/contact

YOUR LOCAL SALES OFFICE

dometic.com/sales-offices

4445105167 3314719.000 2026-02-18