HIGH POINTE

Microwave Oven

INSTRUCTION MANUAL

Model:EC028BMR

Read these instructions carefully before using your microwave oven.

If you follow the instructions, your oven will provide you with many years of good service.

PUT THESE INSTRUCTIONS IN A SAFE PLACE FOR REFERENCE

PRECAUTIONS TO AVOID POSSIBLE EXPOSURE TO EXCESSIVE MICROWAVE ENERGY

(a) Do not attempt to operate this oven with the door open since open door operation can result in harmful exposure to microwave energy.
It is important not to defeat or tamper with the safety interlocks.

(b) Do not place any object between the oven front face and the door or allows soil or cleaner residue to accumulate on sealing surfaces.

(c) Do not operate the oven if it is damaged. It is particularly important that the oven door close properly and that there is no damage to the:
(1) DOOR (bent)
(2) HINGES AND LATCHES (broken or loosened)
(3) DOOR SEALS AND SEALING SURFACES

(d) The oven should not be adjusted or repaired by anyone except properly qualified service personnel.

SPECIFICATIONS

Model	EC028BMR
Rated Voltage/Frequency	120VAC,60Hz
Microwave Input	1500 W
Microwave Output	1000 W
Grill	1150 W
Convection	1450 W

IMPORTANT SAFETY INSTRUCTIONS

When using electrical appliances basic safety precautions should be followed, including the following:

WARNING - To reduce the risk of burns, electric shock, fire, injury to persons or exposure to excessive microwave energy:

1. Read all instructions before using the appliance.
2. Read and follow the specific: "PRECAUTIONS TO AVOID POSSIBLE EXPOSURE TO EXCESSIVE MICROWAVE ENERGY" found on page 2.
3. This appliance must be grounded. Connect only to properly grounded outlet. See "GROUNDING INSTRUCTIONS" found on page 5.
4. Install or locate this appliance only in accordance with the provided installation instructions.
5. Some products such as whole eggs and sealed containers - for example, closed glass jars - are able to explode and should not be heated in this oven.
6. Use this appliance only for its intended use as described in the manual. Do not use corrosive chemicals or vapors in this appliance. This type of oven is specifically designed to heat, cook or dry food. It is not designed for industrial or laboratory use.
7. HOT CONTENTS CAN CAUSE SEVERE BURNS. DO NOT ALLOW CHILDREN TO USE THE MICROWAVE. Use caution when removing hot items.
8. Do not operate this appliance if it has a damaged cord or plug, if it is not working properly, or if it has been damaged or dropped.
9. This appliance should be serviced only by qualified service personnel. Contact nearest authorized service facility for examination, repair, or adjustment.
10. Do not cover or block any openings on the appliance.
11. Do not store this appliance outdoors. Do not use this product near water - for example, near a kitchen sink, in a wet basement, near a swimming pool, or similar location.
12. Do not immerse cord or plug in water.
13. Keep cord away from heated surface.
14. Do not let cord hang over edge of table or counter.
15. When cleaning surfaces of door and oven that comes together on closing the door, use only mild, nonabrasive soaps, or detergent applied with a sponge or soft cloth.
16. To reduce the risk of fire in the oven cavity:
    1). Do not overcook food. Carefully attend appliance when paper, plastic, or other combustible materials are placed inside the oven to facilitate cooking.
    2). Remove wire twist-ties from paper or plastic bag before placing bag in oven.
    3). If material inside of the oven ignite, keep oven door closed, turn oven off, and disconnect the power cord, or shut off power at the fuse or circuit breaker panel.
    4). Do not use the cavity for storage purposes. Do not leave paper products, cooking utensils, or food in the cavity when not in use.

17. Liquids, such as water, coffee, or tea are able to be overheated beyond the boiling point without appearing to be boiling. Visible bubbling or boiling when the container is removed from the microwave oven is not always present.
    THIS COULD RESULT IN VERY HOT LIQUID SUDDENLY BOILING OVER WHEN THE CONTAINER IS DISTURBED OR A UTENSIL IS INSERTED INTO THE LIQUID.
    To reduce the risk of injury to persons:
    1) Do not overheat the liquid.
    2) Stir the liquid both before and halfway through heating it.
    3) Do not use straight-sided containers with narrow necks.
    4) After heating, allow the container to stand in the microwave oven for a short time before removing the container.
    5) Use extreme care when inserting a spoon or other utensil into the container.
18. Do not operate any heating or cooking appliance beneath the appliance.
    (Exception: A microwave oven investigated for use above another heating appliance.)
19. Do not mount unit over or near any portion of heating or cooking appliance.
    (Exception: A microwave oven investigated for use above another heating appliance.)
20. Do not mount over sink.
21. Do not store anything directly on top of the appliance surface when the appliance is in operation.
22. Oversized food or oversized metal utensils should not be inserted in a microwave/ toaster oven as they may create a fire or risk of electric shock.
23. Do not clean with metal scouring pads. Pieces can burn off the pad and touch electrical parts involving a risk of electric shock.
24. Do not use paper products when appliance is operated in the toaster mode.
25. Do not store any materials, other than manufacturer's recommended accessories, in this oven when not in use.
26. Do not cover racks or any other part of the oven with metal foil. This will cause over-heating of the oven.

SAVE THESE INSTRUCTIONS
HOUSEHOLD USE ONLY
(NOT FOR COMMERCIAL USE)

GROUNDING INSTRUCTIONS

This appliance must be grounded. In the event of an electrical short circuit, grounding reduces the risk of electric shock by providing an escape wire for the electric current. This appliance is equipped with a cord having a grounding wire with a grounding plug. The plug must be plugged into an outlet that is properly installed and grounded.

WARNING - Improper use of the grounding can result in a risk of electric shock. Consult a qualified electrician or serviceman if the grounding instructions are not completely understood, or if doubt exists as to whether the appliance is properly grounded. If it is necessary to use an extension cord, use only a 3-wire extension cord that has a 3-blade grounded plug, and 3-slot receptacle that will accept the plug on the appliance. The marked rating of the extension cord shall be equal to or greater than the electrical rating of the appliance.

DANGER - Electric Shock Hazard
Touching some of the internal components can cause serious personal injury or death. Do not disassemble this appliance.

WARNING - Electric Shock Hazard
Improper use of the grounding can result in electric shock. Do not plug into an outlet until appliance is properly installed and grounded.

1. A short power-supply cord is provided to reduce the risks resulting from becoming entangled in or tripping over a longer cord.
2. Longer cord sets or extension cords are available and may be used if care is exercised in their use.
3. If a long cord or extension cord is used:
   1) The marked electrical rating of the cord set or extension cord should be at least as great as the electrical rating of the appliance.
   2) The extension cord must be a grounding-type 3-wire cord.
   3) The longer cord should be arranged so that it will not drape over the counter top or tabletop where it can be pulled on by children or tripped over unintentionally.

RADIO INTERFERENCE

1. Operation of the microwave oven may cause interference to your radio, TV or similar equipment.
2. When there is interference, it may be reduced or eliminated by taking the following measures:
   1) Clean door and sealing surface of the oven
   2) Reorient the receiving antenna of radio or television.
   3) Relocate the microwave oven with respect to the receiver.
   4) Move the microwave oven away from the receiver.
   5) Plug the microwave oven into a different outlet so that microwave oven and receiver are on different branch circuits.
3. This equipment generates, uses and can radiate radio frequency energy and, if not installed and used in accordance with the instructions, may cause harmful interference to radio communications. However, there is no guarantee that interference will not occur in a particular installation. If this equipment does cause harmful interference to radio or television reception, which can be determined by turning the equipment off and on, the user is encouraged to try to correct the interference by one or more of the following measures:
   1) Reorient or relocate the receiving antenna.
   2) Increase the separation between the equipment and receiver.
   3) Connect the equipment into an outlet on a circuit different from that to which the receiver is connected.
   4) Consult the dealer or an experienced radio/TV technician for help.）

This device complies with part 18 of the FCC Rules.

UTENSILS

CAUTION - Personal Injury Hazard

Tightly-closed utensils could explode. Closed containers should be opened and plastic pouches should be pierced before cooking.

See the instructions on "Materials you can use in microwave oven or to be avoided in microwave oven."

There may be certain non-metallic utensils that are not safe to use for microwaving.

If in doubt, you can test the utensil in question following the procedure below.

Utensil Test:

1. Fill a microwave-safe container with 1 cup of cold water (250ml) along with the utensil in question.
2. Cook on maximum power for 1 minute.
3. Carefully feel the utensil. If the empty utensil is warm, do not use it for microwave cooking.
4. Do not exceed 1 minute cooking time.

Materials you can use in microwave oven

Utensils	Remarks
Browning dish	Follow manufacturer's instructions. The bottom of browning dish must be at least 3/16 inch (5mm) above the turntable. Incorrect usage may cause the turntable to break.
Dinnerware	Microwave-safe only. Follow manufacturer's instructions. Do not use cracked or chipped dishes.
Glass jars	Always remove lid. Use only to heat food until just warm. Most glass jars are not heat resistant and may break.
Glassware	Heat-resistant oven glassware only. Make sure there is no metallic trim. Do not use cracked or chipped dishes.
Oven cooking bags	Follow manufacturer's instructions. Do not close with metal tie. Make slits to allow steam to escape.
Paper plates and cups	Use for short–term cooking/warming only. Do not leave oven unattended while cooking.
Paper towels	Use to cover food for reheating and absorbing fat. Use with supervision for a short-term cooking only.
Parchment paper	Use as a cover to prevent splattering or a wrap for steaming.
Plastic	Microwave-safe only. Follow the manufacturer's instructions. Should be labeled "Microwave Safe". Some plastic containers soften, as the food inside gets hot. "Boiling bags" and tightly closed plastic bags should be slit, pierced or vented as directed by package.
Plastic wrap	Microwave-safe only. Use to cover food during cooking to retain moisture. Do not allow plastic wrap to touch food.
Thermometers	Microwave-safe only (meat and candy thermometers).
Wax paper	Use as a cover to prevent splattering and retain moisture.

Materials to be avoided in microwave oven

Utensils	Remarks
Aluminum tray	May cause arcing. Transfer food into microwave-safe dish.
Food carton with metal handle	May cause arcing. Transfer food into microwave-safe dish.
Metal or metal-trimmed utensils	Metal shields the food from microwave energy. Metal trim may cause arcing.
Metal twist ties	May cause arcing and could cause a fire in the oven.
Paper bags	May cause a fire in the oven.
Plastic foam	Plastic foam may melt or contaminate the liquid inside when exposed to high temperature.
Wood	Wood will dry out when used in the microwave oven and may split or crack.

NAMES OF OVEN PARTS AND ACCESSORIES

(In case of any differences between the appliance and the pictures in this manual, the product shall prevail.)

Remove the oven and all materials from the carton and oven cavity.
Your oven comes with the following accessories:

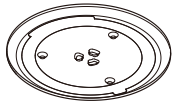

Glass Tray



Turntable Ring Assembly

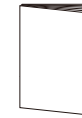

Instruction Manual



Turntable Shaft

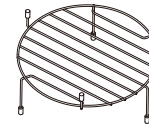

Grill Rack (Can not be used in microwave function and must be placed on the glass tray.)

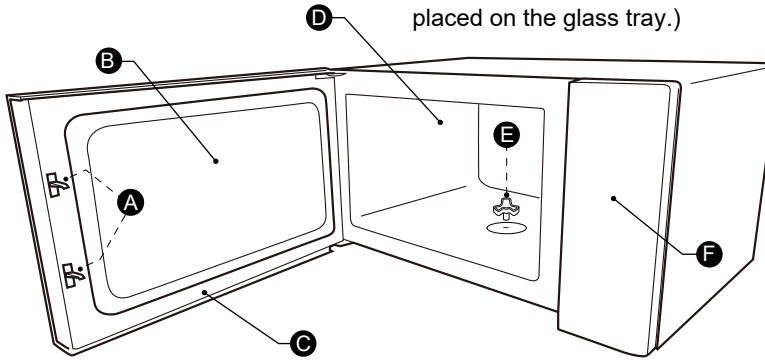

A) Safety interlock system
B) Observation window
C) Door assembly
D) Oven cavity
E) Turntable shaft
F) Control panel

TURNTABLE INSTALLATION

Cleaning the cooking compartment and putting the turntable in place. For new installations, make sure all packaging and shipping tape has been removed from the turntable shaft. Before using the appliance to prepare food for the first time, you will need to put the turntable in place correctly. You must clean the cooking compartment and accessories.

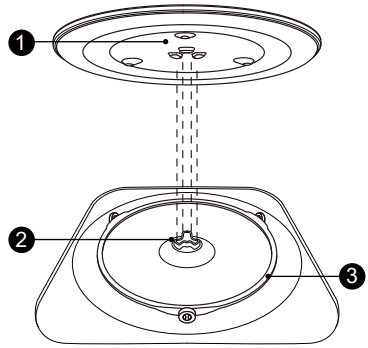

How to put the turntable in place:
1. Place the turntable ring assembly ③ into the recess in the cooking compartment.
2. Place the glass tray ① on the turntable ring assembly ③. Fit the raised, curved lines in the center of the glass tray bottom between the three spokes of the shaft. Make sure that the glass tray ① engages in the turntable shaft ② in the centre of the cooking compartment floor. The rollers on the shaft should fit inside the turntable bottom ridge.

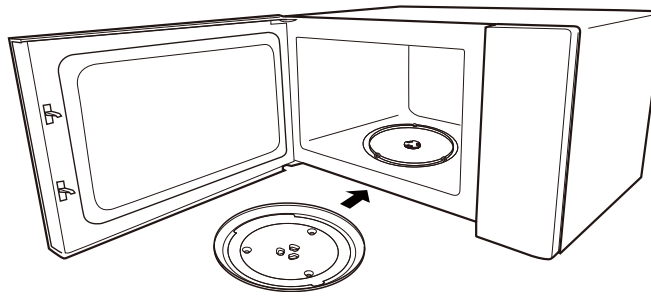

Notes:
1. Never use the appliance without the turntable. Make sure that it is properly engaged. The turntable can turn clockwise or anti-clockwise.
2. Never place the glass tray upside down. The glass tray should never be restricted.
3. Both glass tray and turntable ring assembly must always be used during cooking.
4. All food and containers of food are always placed on the glass tray for cooking.
5. Never restrict the movement of the turntable.
6. If glass tray or turntable ring assembly cracks or breaks, contact your nearest authorized service center.

CONTROL PANEL

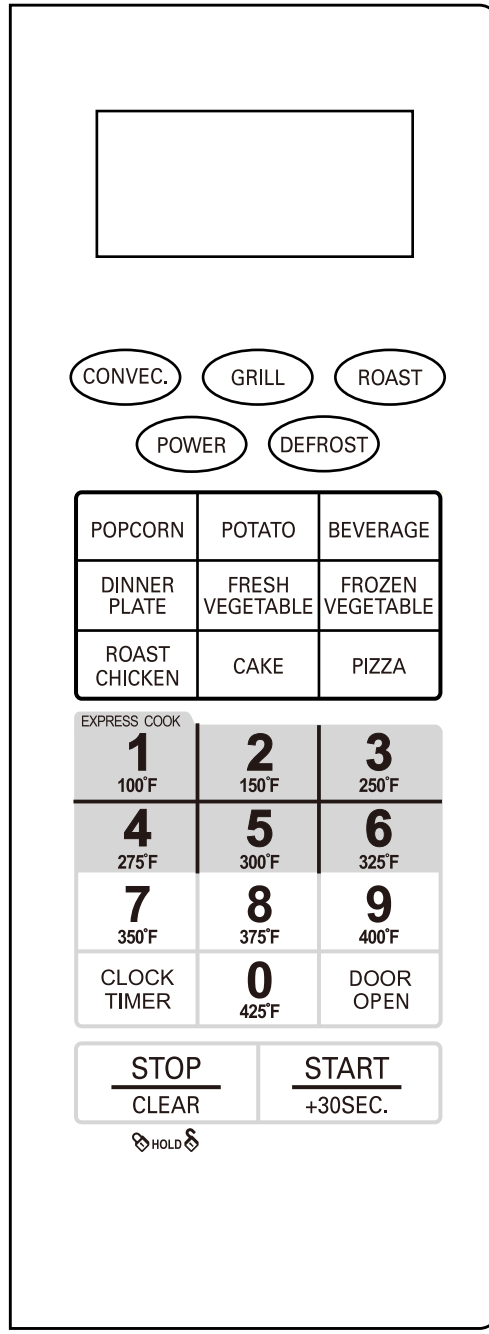

OPERATION

1. Safety Lock

Safety Lock is a system that safeguards against unintended activation of the oven, providing a protective measure to ensure child safety.

(1) How the safety lock works

Initiating a cooking process triggers the door lock, and it also engages if the door remains unlocked for additional 30 minutes following the completion of the cooking.

Safety Lock is active by default. It will only be deactivated if the user chooses to do so manually. Even in the event of a power disconnection, the oven will preserve the state of the safety lock, whether it is activated or deactivated.

(2) Unlock the door

Press DOOR OPEN during operation and open the door within 10 seconds, or the safety lock will re-engage. The door will stay unlocked until cooking is initiated.

Or:

Press DOOR OPEN within 30 minutes after cooking is complete to manually disable the door lock and switch to standby mode. If no key is pressed, the safety lock will automatically disengage after 30 minutes.

(3) Deactivate the safety lock

If there are no children in the house, you can choose to permanently deactivate the safety lock function.

Press 7 350°F , 9 400°F in consecutive order and then press and hold DOOR OPEN for three seconds within 30 seconds, the screen will display “ULoc”, indicating the successful deactivation of the safety lock.

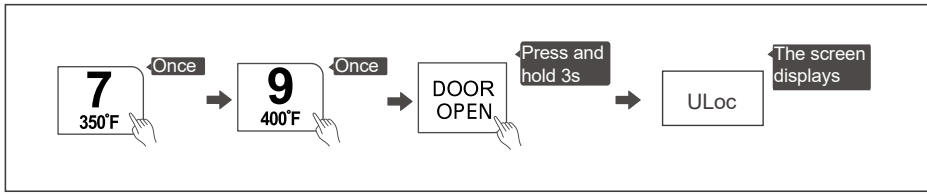

(4) Re-activate the safety lock

Press 7 350°F , 9 400°F in consecutive order and then press and hold DOOR OPEN for three seconds within 30 seconds, the screen will display “Loc”, indicating the successful re-activation of the safety lock.

2. Setting the Clock

(1) Press " CLOCK TIMER " once, and the screen will display "00:00".

(2) Press the number keys to enter the current time.

For example, time is 12:10 now, please press "1,2,1,0" in turn.

(3) Press " CLOCK TIMER " to confirm. The clock is set.

Notes:

(1) If the clock needs to be reset, please repeat step 1 to step 3.

(2) The clock is a 12-hour display. If the clock is not set, it will not work when powered.

3. Setting the Kitchen Timer

(1) Press " CLOCK TIMER " twice, and the screen will display "00:00".

(2) Press the number keys to set the desired time. The maximum time value is "99:99".

(3) Press " START +30SEC. " to confirm. The timer starts counting down.

Note: The kitchen timer is different from the 12-hour system, the kitchen timer is a timer.

4. Microwave Cooking

10 power levels are available.

Level	10	9	8	7	6	5	4	3	2	1
Power	100%	90%	80%	70%	60%	50%	40%	30%	20%	10%
Display	PL10	PL9	PL8	PL7	PL6	PL5	PL4	PL3	PL2	PL1

(1) Press " POWER " once, and "PL10" will display.

(2) Press " POWER " repeatedly to set the power level. The 10 power levels are available.

(3) Press the number keys to set the cooking time. The maximum time value is "99:99".

(4) Press " START +30SEC. " to start cooking.

5. Speedy Cooking

(1) In standby mode and the oven door is closed, pressing the number keys 1 to 6 lets you quickly select a cooking time from 1 to 6 minutes. Then you can press " START/+30SEC. " to increase the cooking time. The maximum time value is "99:99".

(2) In standby mode and the oven door is closed, press " START/+30SEC. " to cook food at 100% power level for 30 seconds. Each press on the same key can increase 30 seconds and the maximum time value is "99:99".

Note: In the cooking state and defrosting by time state, each one more press on "START/+30SEC." can increase the cooking time by 30 seconds (except for defrosting by weight, the preheating and the auto menu).

6. Defrost by Weight

(1) Press " DEFROST " once, "dEF1" will display.

(2) Press the number keys to set the weight of the food. The range of weight is 4 to 100Oz.

(3) Press " START/+30SEC. " to start defrosting.

7. Defrost by Time

(1) Press " DEFROST " twice and then the screen will display "dEF2".

(2) Press the number keys to set the desired defrosting time.
The maximum time value is "99:99".

(3) Press "START/+30SEC." to start defrosting.

Note: The defrost power is PL3 and it cannot be changed.

8. Grill and Combination Cooking

(1) Press " GRILL " repeatedly, and then "G-1", "G-2" or "G-3" will display.

(2) Press the number keys to set the cooking time. The maximum time value is "99:99".

(3) Press " START / +30SEC. " to start cooking.

Note: The buzzer will sound to remind you to turn the food over during grilling.

If no operation, the oven will continue working.

Grill and combination instructions

Instructions	Display	Microwave	Grill
1	G-1	0%	100%
2	G-2	36%	64%
2	G-3	55%	45%

9. Roast Cooking

(1) In standby mode, press " ROAST " once, the oven will display "325℉".

(2) Press the number key to set the temperature.

"100℉, 150℉, 250℉, 275℉, 300℉, 325℉, 350℉, 375℉, 400℉, 425℉" are available.

(3) Press " ROAST " to confirm.

(4) Press the number keys to set the cooking time. The maximum time value is "99:99".

(5) Press " START / +30SEC. " to start cooking.

10. Convection Cooking without Preheat Function

(1) In standby mode, press " CONVEC. " once, the oven will display "100℉".

(2) Press the number key to set the temperature.

"100℉, 150℉, 250℉, 275℉, 300℉, 325℉, 350℉, 375℉, 400℉, 425℉" are available.

(3) Press " CONVEC. " to confirm.

(4) Press the number keys to set the cooking time. The maximum time value is "99:99".

(5) Press " START / +30SEC. " to start cooking.

11. Convection Cooking with Preheat Function

(1) In standby mode, press " CONVEC. " once, the oven will display "100℉".

(2) Press the number key to set the temperature.

"100℉, 150℉, 250℉, 275℉, 300℉, 325℉, 350℉, 375℉, 400℉, 425℉" are available.

(3) Press " START / +30SEC. " to start preheating.

(4) When preheating is completed, the oven will beep. Open the door and place food in the oven. Then close the oven door.

(5) Press the number keys to set the cooking time. The maximum time value is "99:99".

(6) Press " START / +30SEC. " to start cooking.

12. Multi-stage Cooking

Notes: (1) Two cooking stages can be set in multi-stage cooking.

(2) If you set the defrost function, it will work automatically in the first stage.

(3) The kitchen timer, auto menu, speedy cooking and convection cooking with preheat cannot be set as one of the multi-stage.

Example: Defrost food for 5 minutes and then cook with 80% microwave power for 7 minutes.

(1) Press " DEFROST " twice, and then "dEF2" will display.

(2) Press the number keys to set the desired defrost time to 5 minutes.

(3) Press " POWER " repeatedly to set the power level to PL8.

(4) Press the number keys to set the cooking time to 7 minutes.

(5) Press " START / +30SEC. " to start cooking.

13. Inquiring Function

(1) If the clock has been set, the current time will display for three seconds by pressing " CLOCK / TIMER " in the cooking state.

(2) In the microwave cooking state, press " POWER " to inquire about the power level. It will display for three seconds. In grilling state, combination cooking state, roast cooking state and convection cooking state, press the corresponding key to inquire about the cooking mode or the temperature.

14. Lock Function for Children

You can use this function to disable the screen buttons and prevent your child from accidentally turning the oven on.

To activate the lock:

In standby mode, press and hold " STOP / CLEAR (HOLD) " for three seconds. A beep sounds and the locked icon will display.

To deactivate the lock:

In the locked state, press and hold " STOP / CLEAR (HOLD) " for three seconds. A beep sounds.

15. Auto Menu

(1) In standby mode, press the corresponding key once, and then the default weight of food will display.

Example: Press " POTATO " once and then "1" displays.

(2) Press the corresponding key repeatedly to set the weight of the food.

(3) Press " START / +30SEC. " to start cooking.

Note: For the menu " CAKE ", please skip the step 2.

Auto Menu Chart

Menu	Weight	Display	Power
POPCORN	1.75Oz	1.75Oz	PL10
	3.00Oz	3.00Oz	
	3.50Oz	3.50Oz	
POTATO	1 (8.0Oz)	1	
	2 (16.0Oz)	2	
	3 (24.0Oz)	3	
BEVERAGE	1 (8.8Oz)	1	
	2 (17.6Oz)	2	
	3 (26.4Oz)	3	
DINNER PLATE	8.00Oz	8.00Oz	
	12.00Oz	12.00Oz	
	16.00Oz	16.00Oz	
FRESH VEGETABLE	4.00Oz	4.00Oz	
	8.00Oz	8.00Oz	
	16.00Oz	16.00Oz	
FROZEN VEGETABLE	4.00Oz	4.00Oz	
	8.00Oz	8.00Oz	
	16.00Oz	16.00Oz	
ROAST CHICKEN	16.00Oz	16.00Oz	P100+Grill +Convection
	24.00Oz	24.00Oz	
	32.00Oz	32.00Oz	
	40.00Oz	40.00Oz	
	48.00Oz	48.00Oz	
CAKE	16.00Oz	16.00Oz	Conv.325℉ with preheat
PIZZA	10.00Oz	10.00Oz	P100+Grill +Convection
	22.00Oz	22.00Oz	

MAINTENANCE

Troubleshooting

Check your problem by using the chart below and try the solutions for each problem. If the microwave oven still does not work properly, contact the nearest authorized service center.

TROUBLE	POSSIBLE CAUSE	POSSIBLE REMEDY
Oven will not start	a. Electrical cord for oven is not plugged in. b. Door is open. c. Wrong operation is set.	a. Plug into the outlet. b. Close the door and try again. c. Check instructions.
Arcing or sparking	a. Materials to be avoided in microwave oven were used. b. The oven is operated when empty. c. Spilled food remains in the cavity.	a. Use microwave-safe cookware only. b. Do not operate with oven empty. c. Clean cavity with wet towel.
Unevenly cooked foods	a. Materials to be avoided in microwave oven were used. b. Food is not defrosted completely. c. Cooking time, power level is not suitable. d. Food is not turned or stirred.	a. Use microwave-safe cookware only. b. Completely defrost food. c. Use correct cooking time, power level. d. Turn or stir food.
Overcooked foods	Cooking time, power level is not suitable.	Use correct cooking time, power level.
Undercooked foods	a. Materials to be avoided in microwave oven were used. b. Food is not defrosted completely. c. Oven ventilation ports are restricted. d. Cooking time, power level is not suitable.	a. Use microwave-safe cookware only. b. Completely defrost food. c. Check to see that oven ventilation ports are not restricted. d. Use correct cooking time, power level.
Improper defrosting	a. Materials to be avoided in microwave oven were used. b. Cooking time, power level is not suitable. c. Food is not turned or stirred.	a. Use microwave-safe cookware only. b. Use correct cooking time, power level. c. Turn or stir food.

For The Period Of: HIGH POINTE Will Replace Or Repair:

One Year

From the date of the original purchase.

Any part **of the microwave oven which fails due to a defect in materials or workmanship. During his full one-year warranty HIGHPOINTE will also provide, all labor and service to replace the defective part.**

What HIGH POINTE Will Not Cover:

- **Service trips to your home to teach you how to use the product.**
- **Improper installation,delivery to maintenance.**
- **Failure of the product if it is abused, misused,or used for other than the intended puepose or used commercially.**
- **Replacement of the house fuses or resetting of the circuit breakers.**
- **Damage to the product caused by accident, fire,floods or acts of God.**
- **Incidental or consequential damage caused by possible defects with this appliance.**
- **Damage caused after delivery.**

This warranty is extended to the original purchaser. for products purchased for home use within the USA.In Alaska, the warranty excludes the cost of shipping or service calls to your home or dealer.

Some states do not allow the exclusion or limitation of incidental or consequential damages. This warranty gives you specific legal rights, and you may also have other rights which vary from state to state.To know what your legal rights are, consult your local or state consumer affairs office or your state's Attorney General.

BEFORE YOU CALL FOR SERVICE

Refer to the following checklist before you call for service.

If oven does not work:

1. Check that power cord is securely plugged in.
2. Check that door is firmly closed.
3. Check that the cooking time is set.
4. Check for tripped circuit breaker.

If there is sparking in the cavity:

Check the containers, dishes or utensils in the oven and make sure they are not metal or metal trim.

HIGH POINTE AUTHORIZED SERVICE	TO FIND THE LOCATION AND PHONE NUMBER OF YOUR NEAREST AUTHORIZED SERVICE CENTER...
CALL 1-574-848-1630 OR EMAIL WARRANTY DEPT@ COLLINS-N-CO.COM	

FOR CUSTOMER SERVICE,PLEASE WRITE TO:
High Pointe
COLLINS & COMPANY
17880 COMMERCE DRIVE
PO BOX 1009
BRISTOL,INDIANA 46507