Operator Manual

Generator Set

HGLAA Spec B

English - Original Instructions

Table Of Contents

Page

1 - Introduction..... 5

2 - Safety..... 9

3 - Basic Service Practices..... 29

4 - Service Support..... 35

5 - Product and System Identification..... 41

6 - Product and System Overviews..... 47

7 - Operating Information..... 57

8 - Maintenance..... 73

9 - Troubleshooting..... 97

10 - Storage Practices..... 111

11 - Specifications..... 115

Torques..... 121

Index..... 123

Chapter 1 - Introduction

Contents

1.1 About the Service Information-Owner 7
1.2 Illustrations 7

 © 2024 Cummins Inc.

This Page Left Intentionally Blank

1.1 About the Service Information-Owner - Overview

General Information

Cummins Inc. manuals are created to support Cummins® products.

The content of this manual is based on the information in effect at the time of publication.

- Cummins Inc. reserves the right to make any changes at any time without obligation.
- If differences are found between your product and the information in this manual, contact a Cummins® Authorized Repair Location.

For information on components or fault codes not supplied by Cummins Inc., contact the original equipment manufacturer (OEM) or supplier.

This set of literature is intended to provide guidance and recommendations for the safe operation and maintenance of the applicable Cummins® product.

This product has been designed to provide safe and efficient service when properly installed, maintained, and operated.

Overview

Owner/Operator information contains the following.

- Operating instructions
- Daily maintenance schedules
- Routine maintenance schedules
- Overhaul schedules, when applicable
- Common repair instructions
- Basic troubleshooting

1.2 Illustrations - Overview

General Information

Various imagery styles are utilized throughout the service information.

- Online images are delivered in color, rendered styles.
- Printed images are delivered in black and white line art styles.

When viewing images online within instructional context, the colors represent the following actions.

- Blue or Magenta - Target, or primary component being handled.
- Orange or Green - Additional components being removed or installed to access the target component.
- Yellow - Areas highlighted for inspection, special attention, or adjustment.
- Cyan, Light Blue, or Purple - Special tools or other equipment.
- Blue/White Dash - Indicating surfaces to apply a chemical or material.
- Light Grey - Remaining, background components.

© 2024 Cummins Inc.

Chapter 2 - Safety

Contents

2.1 General Safety -Generator Set RV 11
2.2 Safety Messages 24
2.3 Batteries 24
2.4 Battery Cables and Connections 24
2.5 Equipment 26

 © 2024 Cummins Inc.

This Page Left Intentionally Blank

2.1 General Safety -Generator Set RV - Overview

General Information

This procedure contains general safety precautions that must be followed to provide personal safety.

Read and understand the safety information and precautions before operating or performing any repair.

Overview

Work Environment

Follow these recommended practices when servicing products.

- Always follow on-site safety requirements and regulations.
- Always follow local training, certification, authorization, and specific customer requirements.
  - Do not work on products unless proper training has been completed to allow safe repair completion.
  - Do not operate equipment before product familiarization using the equipment operator manual.
- Always be aware of hazardous conditions that may exist in the work environment.
  - Work in a well-ventilated area away from ignition sources.
  - If adverse weather conditions are present, take appropriate safety precautions when performing work.
- Training
  - Confirm if you have received task and safety training for the job being performed.
- Working Alone
  - Avoid working alone.
  - Avoid working where you are not able to be seen or heard by another person.
  - If you must work alone, notify others of your location and schedule check-in times.
- Safety Barricades and Warnings
  - Mark overhead work areas with barricade tape or signs.
  - Mark open floor hazards with barricade tape, signs, or cones.
- Confined Space
  - Confirm if a confined space entry permit is required.
  - If required, confirm the permit is posted, signed, and dated correctly.
- Hot Work
  - Confirm a functional fire extinguisher is readily available.
    - Fire extinguishing rating must meet required safety regulations based on type of work being performed.
  - Maintain separation between ignition sources and fuel sources.
- Wheel Chocks
  - Place wheel chocks at either the front or back tire of the unit prior to starting the task.
- Spotter
  - Use a spotter when moving a customer's unit.
  - Confirm the driver can see and hear the spotter when moving.

© 2024 Cummins Inc.

- Housekeeping (The 5 S's - Scrap or Segregate, Set to Order, Spotless, Standardize, and Sustain)
  - Remove parts, extension cords, air hoses, and liquids from the work area that may cause trip, slip, or fall hazards.

Perform the following prior to beginning work on any products.

- Shutdown the equipment unless otherwise directed by troubleshooting procedures.
- Always allow the product to cool.
- Lock-Out-Tag-Out Equipment.
- Always make sure the product is properly supported by blocks or stands.
  - Do not work on a product supported only by lifting jacks or hoists.
- Become familiar with the tools required for performing the task at hand and how to use those tools correctly.
- Use only genuine Cummins or Cummins Recon replacement parts as instructed.

Best Safety Practices

Follow these recommended practices when servicing or operating equipment.

- Always wear protective glasses and protective shoes.
- Remove rings, watches, long jewelry, or metallic items.
- Do not wear loose fitting or torn clothing, jewelry, long hair, etc.
- Do not perform any repairs, or operate equipment, when fatigued or impaired due to drugs or alcohol.
- Always use tools that are in good condition.
- Do not work on equipment with the batteries connected or that is running unless otherwise directed by troubleshooting procedures.
- If any work must be performed while the batteries are connected or the unit is running, use extreme caution especially around hot components, moving parts, etc.
- Exercise caution when working on products that have just been turned off.
  - Hot parts may cause burns or ignite or melt common materials.
- Do not bleed the fuel system of a hot engine.
  - Contact with hot manifolds or other components may cause a fire.
- Only use proper engine barring techniques.
- Do not lift components that weigh 23 kg [50 lb] or more.
  - Use mechanical help or seek assistance.
- Exercise caution when working around rotating parts.
  - Rotating parts can cause cuts, mutilation, or strangulation.
- Exercise caution when working on electrical components.
  - High voltages can cause serious injury or death.
- Relieve system pressure as instructed before removing or disconnecting lines, fittings, or related items.
- Always test for pressure leaks as instructed.
- Always torque fittings and connections to the required specifications.
  - Over or under tightening can damage threads and create leaks.
- Always use the same fastener part number, or equivalent, when replacing fasteners.

Standard Job Safety Work Practices

- Job Safety Analysis.
  - Assess the job to identify safety hazards that may occur during the repair event.

- Ascending or Descending
  - Maintain 3 points of contact when using steps, ladders, or entering and exiting a unit.
- Communication
  - When working with others, make sure you understand what each other is doing to safely complete the task.
- Eyes On Hands and Work.
  - Confirm if you will be able to maintain an unobstructed view of your hands at all times while performing the task.
- Eyes On Path
  - Watch for hazards in your path to avoid trip or slip hazards. Examples are pits, platform edges, etc.
- Line Of Fire
  - Position yourself so that you avoid striking against, or being struck by, anything that can swing, fall, or roll.
- Pinch Point
  - Prevent exposure of all parts of your body to a nip hazard or pinch point.
- Rushing
  - Take adequate time to safely perform the job. Do not rush or take short cuts.
- Follow Procedures
  - Utilize QuickServe® Online or other standard procedures when available.
  - Make sure the procedures are correct and safe.

Job Safety Assessment

Completing a Job Safety Assessment prior to performing work helps identify job safety hazards and prevent incidents.

Use the guidelines below to assess if a situation is safe or at risk prior to performing designated work.

- If determined to be at risk, take appropriate precautions to prepare for, or eliminate, the hazard.
- If the risks are uncontrollable, consult a knowledgeable resource to find a safe practice solution.
  - A knowledgeable resource may include, but is not limited to, one of the following:
    - Site supervisor
    - Customer
    - Work supervisor
- Always check with the site where work is being performed to determine if safety assessment documentation is required.

Emergency Action Plan

Personnel engaged in installation, commissioning, operating and maintenance of Cummins Inc. products must also comply with all statutory requirements and regulations reguarding health and safety.

- Establish and have in place an emergency action plan that complies to all local safety regulations.
  - Fire extinguishing media that meets required safety regulations based on type of work being performed.
  - First aid kits available.
  - Eye flushing safety device.
  - Chemical spill kit for prompt response and clean-up of a spill, discharge, or leak of hazardous materials or wastes.

Common Hazards

© 2024 Cummins Inc.

Follow these recommended practices when interacting with equipment as the following hazards may exist.

- High Temperature Area
  - Be alert for high temperature areas which may cause severe burns.
  - High temperature areas may be encountered in the following situations.
    - On products that have just been turned off.
    - On or around exhaust related components (turbocharger, aftertreatment systems, etc).
    - In exhaust gas flow paths.
    - Contacting hot fluid lines, tubes, or compartments.
- Recommended Practices
  - Allow components to cool before servicing.
    - Verify the temperature of the component.
    - Utilize an infrared gun, temperature sensor, temperature gauge, or other reliable method to determine component temperature.
  - Protect Eyes.
  - Protect Skin.
    - Wear insulated gloves.
  - Make sure surrounding items do not come in contact with hot components or exhaust.
    - Contact may ignite or melt those materials.
- Heavy Objects
  - Be alert when working with heavy objects.
  - Do not lift components that weigh 23 kg [50 lb] or more.
    - Use mechanical help or seek assistance.
  - Use mechanical help to move items when ever possible.
    - Make sure the load is securely fastened to the equipment.
  - Make sure lifting devices, like chains, hooks, slings, etc., are in good condition and are rated for the correct capacity before use.
  - Make sure lifting devices are positioned correctly before use.
  - Use a spreader bar when necessary.
  - If the item can be lifted manually, squat to lift and lower the item.
    - Do NOT bend at the waist.
  - Maintain balance when lifting items by keeping feet apart or staggered if possible.
  - If the item must be carried, make sure the path is clear when carrying the item to, and placing the item in, the desired location.
- Pressurized Areas
  - Be alert for pressurized areas. Pressurized areas may be encountered in the following situations.
    - Air, Oil, Fuel, and Cooling systems.
    - When disconnecting or removing lines, fittings, or related items.
    - When disconnecting a device from a pressurized system.
    - When removing or loosening caps on tanks or pressurized systems.
  - Injuries that may result when interacting with pressurized areas are listed below.
    - High pressure spray can penetrate the skin, serious injury or death may result.
    - Hot fluid spray can cause burns.

- Recommended Practices
  - Protect Skin.
    - Wear impervious gloves.
    - If skin penetration from high pressure spray occurs, it is a medical emergency, seek medical attention immediately.
  - Check for pressure leaks as instructed.
    - Never check for pressure leaks with your hand.
  - Allow product to cool before accessing pressurized areas.
  - Relieve system pressure as instructed.
  - Slowly loosen fill caps to relieve pressure before servicing.

Common Substances

Follow these recommended practices when interacting with the following substances, for information regarding proper handling of various substances refer to the manufacturer's safety data sheet.

- Storage
  - Do not store any of the following common substances in the generator set compartment.
  - Oily rags and other material can restrict cooling and cause fire.
  - Keep the generator set, drip pan, and compartment clean.
- Coolant
  - Coolant is also referred to as antifreeze.
  - Protect Eyes.
    - In case of contact with eyes, flush with water for a minimum of 15 minutes.
    - Seek medical attention immediately.
  - Protect Skin.
    - In case of contact with skin, wash with soap and water.
    - Remove contaminated clothing.
    - If injection occurs, it is a medical emergency, seek medical attention immediately.
  - Do not ingest.
    - If ingested, drink excess water for dilution and seek medical attention.
  - Do not pour used antifreeze into containers that have been used to store other chemicals or products, such as oil or gasoline, unless they have been thoroughly cleaned.
  - If material is spilled, avoid contact and dispersal with runoff, soil, waterways, drains, and sewers.
    - Provide adequate ventilation to the area.
    - Absorb with sand, clay, or commercial absorbent.
    - Transfer to containers and neutralize the material.
    - Flush spill area with soap and excess water.
  - Report spills effecting water source contamination to local authorities immediately.
  - Proper disposal is required.
    - Dispose of in accordance with local and environmental regulations.

© 2024 Cummins Inc.

- Liquid Nitrogen
  - Work in a well-ventilated area.
  - Protect Eyes.
    - In case of contact with eyes, flush with water for a minimum of 15 minutes.
    - Seek medical attention immediately.
  - Protect Skin.
    - In case of contact with skin, seek medical attention immediately.
  - Wear protective clothing and gloves that insulate.
  - Handle items with tongs or wire hooks.
  - Avoid prolonged breathing of liquid nitrogen vapors.
    - Utilize breathing assistance or oxygen if necessary.
- Lubricating Oil
  - Protect Eyes.
    - In case of contact with eyes, flush with water for a minimum of 15 minutes.
  - Protect Skin.
    - In case of contact with skin, wash with soap and water.
  - Do not ingest.
    - If ingested, seek medical attention.
  - Proper disposal is required.
    - Dispose of in accordance with local and environmental regulations.
- Refrigerant
  - Protect Eyes.
    - In case of contact with eyes, flush with water for a minimum of 15 minutes.
    - In case of frostbite, use lukewarmwater, not hot.
    - Seek medical attention if irritation continues.
  - Proper disposal is required.
    - Dispose of in accordance with local and environmental regulations.
  - Only disconnect liquid refrigerant lines in a well-ventilated area.
    - Liquid refrigerant systems must be properly emptied and filled using equipment that prevents the release of refrigerant gas into the atmosphere.
    - Federal law requires capturing and recycling refrigerant in the United States of America.
- Solvents
  - Follow the manufacturer's instructions for safe handling practices.
  - Follow the manufacturer's recommendations for use.
  - Some solvents are flammable and toxic.
  - Protect Eyes.
    - In case of contact with eyes, follow manufacturer's recommendations.
  - Protect Skin.
    - In case of contact with skin, follow manufacturer's recommendations.
  - Dispose of in accordance with manufacturer's recommendations.

- Starting Aids (Starting Fluid)
  - Do NOT use starting fluid if the intake air heater option is used.
  - Do NOT use volatile cold starting aids in underground mine or tunnel operations.
    - The local United States Bureau of Mines inspector can provide more information and instructions.
  - Avoid sparks, arcing switches and equipment, cigarettes, pilot lights, flames, and other sources of ignition.
  - Work in a well-ventilated area.
  - Avoid inhalation.

Electrical Components

Follow these recommended practices when interacting with electrical components.

- Lead Acid Batteries
  - Protect Eyes.
    - Wear safety glasses or goggles.
    - In case of battery acid contact with eyes, flush with water for a minimum of 15 minutes.
    - Seek medical attention immediately.
  - Protect Skin.
    - Wear rubber gloves and a chemical apron.
    - In case of battery acid contact with skin or clothing, rinse with waterfor several minutes.
    - Avoid spreading the acid.
    - Seek medical attention immediately.
  - Do NOT open the battery caps with your face over or near the battery.
  - Remove rings, watches, long jewelry, or metallic items when working with or near batteries.
  - Ventilate the battery compartment before servicing the battery.
  - Work in a well-ventilated area.
  - Avoid sparks, arcing switches and equipment, cigarettes, pilot lights, flames, and other sources of ignition.
  - Use insulated or non-conducting tools.
  - Neutralize static buildup by contacting the nearest ground surface before working on a battery.
  - Do not lift batteries by the posts.
  - Do not touch both battery terminals with your bare hands at the same time.
  - Disconnect the negative (-) battery cable first.
  - Attach the negative (-) battery cable last.

Fuels

Follow these recommended practices when interacting with equipment that uses different types of fuels.

© 2024 Cummins Inc.

- General recommended safety practices for all fuels.
  - Protect Eyes.
  - Protect Skin.
  - ALWAYS test for fuel leak as instructed.
  - Do NOT dilute.
  - Avoid sparks, arcing switches and equipment, cigarettes, pilot lights, flames, and other sources of ignition.
  - Provide extra ventilation to the work area.
  - Do not troubleshoot or repair fuel leaks while the engine is running.
  - If material is spilled, avoid contact and dispersal with runoff, soil, waterways, drains, and sewers.
    - Absorb with sand, clay, or commercial absorbent.
    - Transfer to containers and neutralize the material.
    - Flush spill area with soap and excess water.
  - Report spills effecting water source contamination to local authorities immediately.
  - Proper disposal is required.
    - Dispose of in accordance with local and environmental regulations.
  - Always torque fittings and connections to the required specifications.
    - Over or under tightening can damage threads and create leaks.
  - Storage
    - Do not store any fuels in the generator set compartment.
    - Oily rags and other material can restrict cooling and cause fire.
    - Keep the generator set, drip pan, and compartment clean.
- Gasoline additional recommended safety practices.
  - ALWAYS be alert for the smell of gasoline.
  - Vapors accumulate near the floor.
    - Check the work floor, sumps, and low-lying areas for ignition sources before servicing equipment.
- Biodiesel additional recommended safety practices.
  - Vapors accumulate near the floor.
    - Check the work floor, sumps, and low-lying areas for ignition sources before servicing equipment.

© 2024 Cummins Inc.

- Compressed Natural Gas additional recommended safety practices.
  - Always be alert for the smell of gas.
    - Compressed natural gas is typically treated with an odor producing chemical for leak detection.
    - Non-refined sources of natural gas (landfill gas, biogas, coal bed gas, wellhead gas, etc.) can not always be detected by smell.
  - Always test for fuel leaks as instructed. Odorant can fade.
  - Upon entering a room or approaching a vehicle where the smell of gas is present, immediately shutoff all engines and ignition sources.
  - Natural gas ignites when there is a 5% - 15% mixture in the air.
    - Asphyxiation can occur when concentration reaches 21% or more.
  - Do not start equipment or nearby equipment until a suspected gas leak is corrected and the area is ventilated.
  - Work in areas that do not share common ventilation with areas containing ignition sources.
  - Store and service natural gas fueled equipment in large, well-ventilated areas, or outside.
  - Natural gas accumulates near the ceiling.
    - Check the ceiling of the work area for ignition sources before servicing equipment.
  - Only disconnect gas lines in a well-ventilated area.
  - Natural gas ignition systems produce high voltage during operation.
    - Do not touch ignition wiring or components while the engine is operating.
    - If necessary, use only insulated tools.
  - Natural gas exhaust systems operate at higher temperatures than similar diesel exhaust systems.
    - Do not touch exhaust components.
    - Do not route lines or hoses which deteriorate from heat exposure near exhaust components or in the flow path of the exhaust.
    - Upon entering a room or approaching a vehicle where the smell of gas is present, immediately shutoff all engines and ignition sources.

© 2024 Cummins Inc.

- Liquefied Natural Gas additional recommended safety practices.
  - Always be alert for the smell of gas.
    - Non-refined sources of natural gas (landfill gas, biogas, coal bed gas, wellhead gas, etc.) can not always be detected by smell.
    - Liquefied natural gas may not have an odor.
  - Always test for fuel leaks as instructed. Odorant can fade.
  - Natural gas ignites when there is a 5% - 15% mixture in the air.
    - Asphyxiation can occur when concentration reaches 21% or more.
  - Do not start equipment or nearby equipment until a suspected gas leak is corrected and the area is ventilated.
  - Work in areas that do not share common ventilation with areas containing ignition sources.
  - Store and service natural gas fueled equipment in large, well-ventilated areas, or outside.
  - Natural gas accumulates near the ceiling.
    - Check the ceiling of the work area for ignition sources before servicing equipment.
  - Only disconnect gas lines in a well-ventilated area.
  - Natural gas ignition systems produce high voltage during operation.
    - Do not touch ignition wiring or components while the engine is operating.
    - If necessary, use only insulated tools.
  - Natural gas exhaust systems operate at higher temperatures than similar diesel exhaust systems.
    - Do not touch exhaust components.
    - Do not route lines or hoses which deteriorate from heat exposure near exhaust components or in the flow path of the exhaust.
  - Liquefied natural gas is stored in vehicle tanks at extremely cold temperatures.
    - If there is a liquefied natural gas spill, evacuate the area immediately and do not attempt to make contact with the liquid.
  - Vapors accumulate near the floor.
    - Check the work floor, sumps, and low-lying areas for ignition sources before servicing equipment.

© 2024 Cummins Inc.

- Liquefied Petroleum Gas
  - Always be alert for the smell of gas.
    - Liquefied petroleum gas is typically treated with an odor producing chemical for leak detection.
  - Always test for fuel leaks as instructed. Odorant can fade.
  - Upon entering a room or approaching a vehicle where the smell of gas is present, immediately shutoff all engines and ignition sources.
  - Work in areas that do not share common ventilation with areas containing ignition sources.
  - Store and service natural gas fueled equipment in large, well-ventilated areas, or outside.
  - Liquefied petroleum gas accumulates near the floor.
    - Check the work floor, sumps, and low-lying areas for ignition sources before servicing equipment.
  - Liquefied petroleum gas ignition systems produce high voltage during operation.
    - Do not touch ignition wiring or components while the engine is operating.
    - If necessary, use only insulated tools.
  - Liquefied petroleum gas exhaust systems operate at higher temperatures than similar diesel exhaust systems.
    - Do not touch exhaust components.
    - Do not route lines or hoses which deteriorate from heat exposure near exhaust components or in the flow path of the exhaust.
  - Liquefied natural gas is stored in vehicle tanks at extremely cold temperatures.
    - If there is a liquefied natural gas spill, evacuate the area immediately and do not attempt to make contact with the liquid.

Personal Protective Equipment (PPE)

- To reduce the possibility of personal injury, personal protective equipment (PPE) should be utilized.
  - Always meet on-site safety regulations for required PPE.
  - Proper maintenance of safety equipment must be practiced.
  - Integrity of safety equipment must be checked to make sure equipment functionality is maintained.
- Eye Protection
  - Eye protection must always be worn. Types of eye protection to consider are listed below.
    - Safety glasses. Exposure to flying particles or debris, chemicals or caustic liquids, gases or vapors.
    - Polarized safety glasses. Working in outdoor or bright lighting environments.
    - Over-the-glass safety glasses. Add protection to prescription glasses.
    - Safety goggles: Handling caustic liquids or chemicals.
    - Shade or arc rated eyewear. Exposure to welding. Use appropriate filter ratings.

© 2024 Cummins Inc.

- Foot Protection
  - Protective shoes must always be worn. Wear appropriate foot protection based on the task being completed. Types of protective footwear to consider are listed below.
    - Steel toed shoes. Exposure to falling or rolling objects. Working with or around parts, tools, and equipment.
    - Chemical resistant. Exposure to chemicals and other fluids.
    - Overshoes and overboots. Add protection to everyday work shoes.
    - Foot, toe, and metatarsal guards. Add protection to everyday work shoes.
    - Electrical hazard safety toe shoes. Exposure to electrical hazards.
    - Leather footwear or shoe protectors. Exposure to welding or arc flash.
    - Cold protection. Exposure to cold weather.
- Head and Face Protection
  - Wear appropriate face protection based on the task being completed. Types of head and face protection to consider are listed below.
    - Hard hats. Exposure varies. Consider welding, heat, or arc-rated.
    - Visors. Exposure varies. Consider welding, heat, or arc-rated.
    - Face liners. Exposure to cold weather.
    - Face shields: Exposure to liquid splash. Handling caustic liquids or chemicals.
- Hand Protection
  - Wear appropriate type and fit of gloves based on the task being completed. Types of protective gloves to consider are listed below.
    - Heat resistant or insulated. Exposure to hot items.
    - Flame resistant. Exposure to welding or arc flash.
    - Impact resistant. Performing repetitive impact and vibration work. Using pneumatic tools.
    - Impervious. Exposure to high pressure fluids.
    - Chemical resistant. Exposure to chemicals, fluids, or batteries.
    - Cut resistant. Handling sharp objects or tools.
    - Cold weather. Exposure to cold weather.
- Hearing Protection
  - When working around operating equipment, appropriately rated hearing protection should be worn. Types of hearing protection to consider are listed below.
    - Single use ear plugs.
    - Pre-formed ear plugs.
    - Ear muffs.
- Protective Clothing
  - Wear appropriate protective clothing based on the task being completed. Types of protective clothing to consider are listed below.
    - Flame resistant. Exposure to electrical hazards. Exposure to oil and gas or generator set applications. Performing welding.
    - Chemical resistant. Exposure to chemicals.
    - High visibility. Exposure to reduced visibility working environments. Working on mining, oil and gas, or sites with large equipment.

- Respiratory Protection
  - Wear appropriate respiratory protection based on the task being completed. Types of respiratory protection to consider are listed below.
    - Disposable respirators. Exposure to dust and particles, welding fumes, nuisance odors, nuisance level acid gas.
    - Reusable respirators. Exposure to cleaning, machining, welding, sanding, grinding, etc.
- Fall Protection
  - Utilize fall protection if a task is being completed more than 1.2 m [4 ft] above a solid surface. Types of fall protection to consider are listed below.
    - Fall harness and lanyard combinations.
    - Safety nets.
    - Guardrails.

Tools and Equipment

- Tool Selection
  - Select the correct tool or equipment to perform the task.
- Tool Condition
  - Confirm the tool or equipment is free of defects before use.
    - Always use tools that are in good condition.
- Tool Use
  - Use the tool or equipment as directed.
  - Follow the manufacturer's instructions.

Ergonomics

- Back-Bending and Twisting
  - Avoid bending forward more than 45° at your waist.
  - Avoid working with your back twisted with loads over 23 kg [50 lb].
  - Wear approved back support belt when appropriate.
- Lifting and Lowering
  - Squat to pick up parts.
  - Keep loads close to the body when lifting or carrying.
  - Use a team lift or a lifting device if the object is more than 23 kg [50 lb].
  - Wear approved back support belt when appropriate.
- Knee
  - Avoid bending your knee more than 90°.
  - Avoid kneeling for more than 4 hours per day.
  - Wear approved knee protective devices when appropriate.
- Pulling or Pushing
  - Pull with your arms.
  - Push with your legs.
  - Avoid exerting more force than necessary.
  - Avoid moving heavy load(s) too quickly.

© 2024 Cummins Inc.

2.2 Safety Messages - Overview

General Information

Safety messages are utilized throughout Cummins® Service Information to alert users of hazards that can be encountered when performing work as instructed on Cummins® products.

Safety messages define the following characteristics:

- Severity- seriousness of the hazard in terms of how much harm or damage it can cause
- Hazard- any potential source or agent that can cause harm or damage to life or health
- Risk- negative consequences caused by exposure or interaction with the hazard
- Avoidance- procedures taken to best avoid the risk that the hazard poses

The severity of a safety message is defined by one of the following color-coded signal words:

- Danger – Red background. Indicates a hazardous situation which will result in death or serious injury.
- Warning – Orange background. Indicates a hazardous situation which could result in death or serious injury.
- Caution – Yellow background. Indicates a hazardous situation which could result in minor or moderate injury.

2.3 Batteries - Overview

General Information

The purpose of this document is to make all repair locations aware of safe lead acid battery service instructions.

There are many types of batteries with varying technology.

Common battery types include the following.

- Standard lead acid (also called flooded or wet cell)
  - Starting
  - Deep cycle
  - Serviceable or maintenance free
- Maintenance free absorbent glass mat
- Maintenance free gel cell

Battery supplier service literature will provide specific removal and installation, maintenance, inspection, and testing requirements. See Original Equipment Manufacturer (OEM) service information

2.4 Battery Cables and Connections - Remove and Install

Tools Summary		
Part Name	**Part Number**	**Quantity**
Battery Brush		1

Tools Summary		
Part Name	**Part Number**	**Quantity**
Wire Brush		1
Clean Rag		1
Battery Terminal Sealant		1

General Information

There are different types of battery connections.

These instructions are representing basic safety practices when performing battery servicing.

Refer to OEM Service Manual for specific battery instructions

Remove

Make sure the battery compartment is ventilated.

Remove the cables in the following order.

1. Negative Cable
2. Positive Cable

Remove OEM components, as necessary.

Clean

	**WARNING**	**Battery Exposure** **Battery may explode. Battery acid may cause burns or injury.** **Avoid contact. Wear appropriate personal protective equipment.**

Clean the battery cables and connections if corroded.

Use the following tool as applicable.

Tool Name	Tool Type	Part Number	Quantity
Battery Brush	Generic		1
Wire Brush	Generic		1
Clean Rag	Generic		1

Clean cable connections until surfaces are clear of debris.

Clean battery terminals until surfaces are clear of debris.

Clean battery tops until surfaces are clear of debris.

Check

Check the following.

- Battery cables and connections
- Terminals
- Connectors

© 2024 Cummins Inc.

- Cables

Replace if any of the following are found.

- Broken
- Cracked
- Deformed Terminals
- Loose Terminals

Install

Install the cables in the following order:

1. Positive Cable
2. Negative Cable

Tighten the battery connections.

Prevent corrosion by applying sealant to the terminals.

Tool Name	Tool Type	Part Number	Quantity
Battery Terminal Sealant	Generic		1

Tighten the battery connections.

- Refer to OEM manual for tightening steps.

2.5 Equipment - Safe Service

General Information

Lock out / Tag out must only be performed by persons authorized to perform Lock out / Tag out on the specific equipment.

Lock-Out-Tag-Out

Comply with location specific lock out / tag out procedures including, but not limited to the following.

- Permits for work
- Emergency stop process
- Immobilization of vehicles or equipment
- Lock out / tag out signage and required data
- Informing appropriate site personnel
- Application back-up dependencies
  - Example: Critical life support generator sets

Shut off all sources of energy and check that all moving parts have stopped moving.

Use the appropriate personal protective equipment (PPE) according to local Health, Safety and Environmental (HSE) policies.

Electrical equipment must be treated as energized until proven de-energized with a live-dead-live test

Activate emergency stop.

Isolate the equipment from all energy sources, but not limited to the following.

- Generator set
- Control panels
- Associated equipment
- Batteries
- AC power to all associated heaters

Lock out and apply tag to all points of isolation.

Lock out tags must include the following information at a minimum.

- Identity of the equipment being isolated
- Reason for isolation
- Date of the isolation
- Person that applied the lock out
- Method to contact the person

Verify the Lock out / Tag out by attempting to restart the equipment using manual controls.

Maintain the lock out by performing the following.

- Keep keys secure

Keep unqualified personnel away from the point of work

Re-Energize

Make sure that the work is complete.

Check the following.

- All connections have been restored
- All guards and covers are in place

Make sure that the area is clear of personnel and tools.

Close any test points or stop cocks that were opened during verification.

Cancel any work permits.

Notify the appropriate personnel that the lock out will be removed.

Remove the locks and tags.

Make sure the equipment is ready.

© 2024 Cummins Inc.

Chapter 3 - Basic Service Practices

Contents

3.1 General Cleaning-Generator Set 31

 © 2024 Cummins Inc.

This Page Left Intentionally Blank

3.1 General Cleaning-Generator Set - Overview

General Information

This document provides general cleaning practices for a generator set.

Detailed information for individual components can be found in the clean action for each component.

The intent of cleaning is to remove debris; this does not mean they have to appear as new.

Debris buildup can affect the performance and heat dissipation of pumps and other electric motors.

The general working area must be cleaned prior to opening closed systems.

Accumulation of oils and coolants can result in unsafe working conditions.

Overview

The following conditions must be met before cleaning is started.

- Sources of power must be isolated
- The generator set is not running.
- The generator set has cooled to ambient temperature
- Make sure drainage flows away from the generator set
- Ambient conditions are above freezing temperature

Low pressure wash should be used to remove dust and light debris.

Low pressure wash is defined as follows.

- Use water
- Flow rate between 0.07 and 0.15 lit/sec [1 and 2 gal/min]
- Diameter of the water outlet less than 15.9 mm [5/8 inch]
- Water temperature between 10 °C and 30 °C [50 °F and 86 °F]
- Spray from a distance greater than 10 cm [4 in]
- Spray the target component with a sweeping motion

Do NOT low pressure wash the following components.

- Air filters
- Air inlets
- Fans
- Belts
- Bearings
- Batteries
- Any exposed electrical terminals

High pressure wash should be used to remove large debris or other buildup not removed by a low-pressure wash.

High pressure wash is defined as follows.

- Use water
- Water pressure greater than 10340 kPa [1500 psi]
- Spray from a distance greater than 15 cm [6 in]
- Spray the target component with a sweeping motion

Do NOT high pressure wash the following components.

© 2024 Cummins Inc.

- Air filters
- Air inlets
- Fans
- Belts and Hoses
- Bearings
- Batteries
- Electrical Components
  - Wiring harnesses
  - Electronic Control Module
  - Electronic Control Module Connectors
  - Capacitive Coil Driver Module
  - Ignition Coils and Leads
  - Sensors
  - Any electronic actuators
- Electrical boxes

	**WARNING**	**Steam Cleaning** **Risk of burns and flying debris.** **Wear appropriate personal protective equipment.**

Steam cleaning can be used to remove debris or buildup not removed by a low-pressure wash.

Steam cleaning is defined as follows.

- Use water
- Temperature between 99 °C and 110 °C [210 °F and 230 °F]
- Spray the target component with a sweeping motion

Do not steam clean the following components:

- Air filters
- Air inlets
- Fans
- Belts and Hoses
- Bearings
- Batteries
- Electrical Components
  - Wiring harnesses
  - Electronic Control Module
  - Electronic Control Module Connectors
  - Capacitive Coil Driver Module
  - Ignition Coils and Leads
  - Sensors
  - Any electronic actuators
- Electrical boxes

	**CAUTION**	**Solvent Exposure** **Skin and eye irritation may occur.** **Follow manufacturer's instructions for use. Wear appropriate personal protective equipment.**

Solvent and acid cleaning should be used to remove oils or other buildup not removed by a low-pressure wash.

Solvent cleaning should only be used on focused areas.

There are several solvent and acid-type cleaners available.

Follow the manufacturer's recommendations for cleaning solvents.

Do NOT use solvents on the following components.

- Rubber couplings
- Rubber vibration isolators

© 2024 Cummins Inc.

Chapter 4 - Service Support

Contents

4.1 Additional Service Literature 37
4.2 Service Assistance 38
4.3 Manufacturing Locations 39

 © 2024 Cummins Inc.

This Page Left Intentionally Blank

4.1 Additional Service Literature - Overview

Overview

The following publications and information are available online for this Package.

- HGLAA Spec B Installation manual (A075S348)
- HGLAA Spec B Operator manual (A075S349)
- HGLAA Parts manual (A062Y987)
- HGLAA Recommended Spares List (A062Z023)
- HGLAA Spec B Service Suite
  - Safety
  - Operation
  - Service
    - Torques
    - Drawings
  - Diagnostics
  - Maintenance Schedule
  - Product Data and Specifications
  - General Information
- Quick Start Guide (RV/CM) (A062P264)
- Health and Safety manual (0908-0110)
- Service Tools manual (A043D529)
- Warranty manual (4021290)
- PGBU Global Product Coverage manual (A048H943)

The following publications are available to be purchased in hard copy for this Package.

- HGLAA Spec B Installation manual (A075S348)
- HGLAA Spec B Operator manual (A075S349)
- HGLAA Spec B Service manual (A075S350)
- HGLAA Spec B Troubleshooting and Diagnostics manual (A075S351)
- HGLAA Parts manual (A062Y987)
- HGLAA Spec B Literature List (A075S438)
- HGLAA Standard Repair Times manual (A062Z021)
- HGLAA Recommended Spares List (A062Z023)
- Quick Start Guide (RV/CM) (A062P264)
- RV Generator Set Warranty Statement (OOAB-2012-03)
- Health and Safety manual (0908-0110)
- Service Tools manual (A043D529)
- Warranty manual (4021290)
- PGBU Global Product Coverage manual (A048H943)

© 2024 Cummins Inc.

4.2 Service Assistance - Overview

Overview

To contact or locate the nearest Cummins® Authorized Repair Location, please visit locator.cummins.com.

- For 24 hour assistance, please visit www.cummins.com/support

When contacting Cummins Inc., have the following information readily available:

- Model
- Specification
- Serial Number

Cummins Inc. provides a 24-hour, toll free telephone number to aid in technical and emergency service when a Cummins® Authorized Repair Location can not be reached or is unable to resolve an issue with a Cummins® product.

U.S. and Canada

- 1-800-CUMMINS™ (1-800-286-6467)

Mexico

- 01-800-CUMMINS (2866467)
- Email: contacto.mexico@cummins.com

Australia/New Zealand

- For Australia: 1-300-CUMMINS (1300 286 6467)
- For New Zealand: 0-800-CUMMINS (0800 286 6467)
- Email: 1300cummins@cummins.com

Brazil

- 0800 CUMMINS (0800 286 6467)
- Email: falecom@cummins.com

Europe

- From the UK, Ireland, Germany, France, and the Netherlands - Freephone: 00 8000 2866467 or +44 1327 886464
- Email: cceurope@cummins.com

China

- (+86) 400 810 5252
- Email: cac@cummins.com

India

- 800 210 2525
- Email: powermaster-India@cummins.com

Russia

- Primary: +7 495 926 8624
- Alternate: +7 962 943 1211

For All Other Areas:

- +44 (0) 1327 886464

© 2024 Cummins Inc.

4.3 Manufacturing Locations - Overview

Overview

U.S. and Canada

- Cummins Inc.
- 1400 73rd Ave. NE
- Minneapolis, MN 55432 USA
- 1-800-CUMMINS™ (1-800-286-6467)
- Phone +1 763-574-5000
- Fax +1 763-574-5298

EMEA, CIS

- Cummins Inc.
- Royal Oak Way South
- Daventry
- Northamptonshire
- NN11 8NU
- United Kingdom
- Phone +44 1327 88-6453
- Fax +44 1327 88-6125

Brazil

- Cummins Inc.
- Rua Jati, 310, Cumbica
- Guarulhos, SP 07180-900
- CNPJ: 43.2201.151/0001-10
- Brazil
- Phone 0800 286 6467

China

- Cummins Inc.
- No.118 South Quanli Road
- Wuhan Economic & Technological Development Zone
- Hubei, P.R.China 430058
- Phone + 86 (27) 8421 4008
- Fax + 86 (27) 8421 4804

India

- Cummins Inc.
- Plot No B-2, SEZ Industrial Area
- Village-Nandal & Surwadi, Taluka- Phaltan
- Dist- Satara, Maharashtra 415523
- India
- Phone +91 021 66305514

LATIN AMERICA

© 2024 Cummins Inc.

- Cummins Inc.
- 3350 Southwest 148th Ave.
- Suite 205
- Miramar, FL 33027
- USA
- Phone +1 954 431 551
- Fax +1 954 433 5797

Mexico

- Cummins Inc.
- Eje 122 No. 200 Zona Industrial
- San Luis Potosi, S.L.P. 78395
- Mexico
- Phone +52 444 870 6700
- Fax +52 444 824 0082

ASIA PACIFIC

- Cummins Power Generation (S) Pte Ltd.
- 85 Tuas South Avenue 1
- Singapore 637419
- Fax +65 6265 6909

Chapter 5 - Product and System Identification

Contents

5.1 Model Identification-Generator Set 43
5.2 Dataplates 44

 © 2024 Cummins Inc.

This Page Left Intentionally Blank

5.1 Model Identification-Generator Set - Overview

General Information

Model names provide identification information for Cummins® products.

Information that may be found in model names are listed below.

- Marketing Model Names and numbers
- Specification numbers
- Electrical characteristics
  - Control system

When contacting Cummins® dealers or distributors for service assistance, always be ready to provide the complete product model, service model name or serial number information for the product as listed on the nameplate.

Overview

Generator set model names consist of the following.

1. Month
2. Year of manufacture
3. Plant code
   - 0 = Fridley USA
   - A = Australia
   - B = Italy Rental
   - C = Italy (DIEM)
   - D = Daventry UK
   - E = Loncin
   - F= Domestic US
   - G = Girtz & Brazil G-Drive
   - H = Wuhan China
   - I = India
   - J = Cal Pac (Eco systems)
   - K = Kent UK
   - M = SLP Mexico
   - Q = CPT China
   - S = Singapore
   - T = Brazil
   - V = Venture
   - W = Wuxi China
   - WH = China Domestic Products
   - Y = Nigeria
   - Z = GE Zenith Controls
4. Sequence - 6 characters
   - Product since 2012 have 6 numeric characters previous to this it was three letters followed by three numbers

© 2024 Cummins Inc.

5.2 Dataplates - Overview

Diagrams

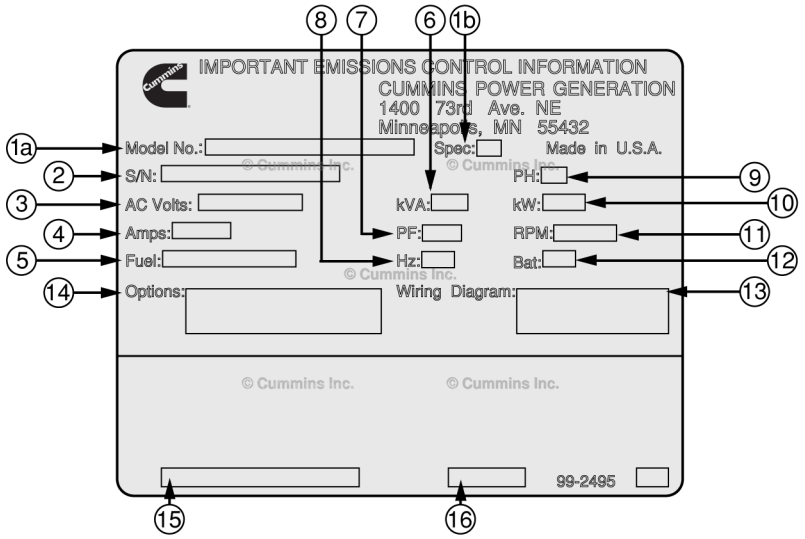

dmey5gxn

Sample Dataplate

1. Model Number and Spec
2. Serial Number
3. AC Volts
4. Amps
5. Fuel
6. kVA
7. PF
8. Hz
9. Phase
10. kW
11. RPM
12. Bat
13. Wiring Diagrams
14. Options
15. Emissions family ID
16. Engine displacement

General Information

Each generator set is provided with a dataplate that contains the generator set model and serial number.

This information is needed when contacting Cummins for parts, service, and product information.

The last character of the Model Number is the "Spec Letter" and is important for obtaining the correct information.

Overview

The fields on the dataplate refer to the following information.

- Model Number and Spec Letter
- S/N
  - Serial Number
- AC Volts
  - Generator set output voltage rating
- Amps
  - Generator set output amps at rated kW and maximum volts

- Fuel
  - Generator set fuel type
  - Diesel, Gasoline, LPG Vapor, LPG Liquid, or Natural Gas
- kVA
  - kW / Power Factor
- PF
  - Power Factor
- Hz
  - Generator set output frequency
- Phase
  - Number of generator set output phases
  - Can be one or three phase output
- kW
  - Generator set output power rating
- RPM
  - Generator set operating speed at rated output
- Bat
  - Generator set DC battery voltage requirement
- Wiring diagram
  - Diagram as specified by the generator set parts list
- Options
  - Feature options included on the generator set

© 2024 Cummins Inc.

Chapter 6 - Product and System Overviews

Contents

6.1 Generator Set 49
6.2 Operator Interface 54
6.3 Remote Control Panel 55

 © 2024 Cummins Inc.

This Page Left Intentionally Blank

6.1 Generator Set - Overview

Diagrams



anq3dbbr

Front View

1. Enclosure cover
2. Enclosure door
3. Mounting system

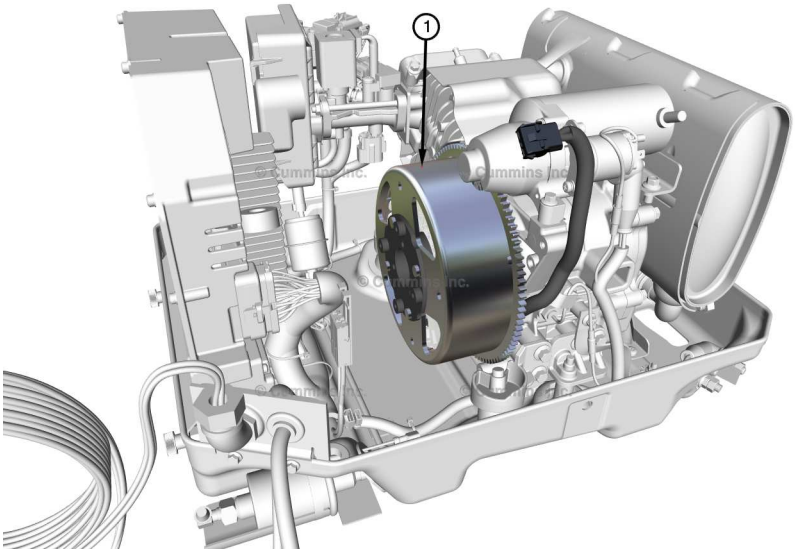

zrdkvkmq

Rear View

1. Alternator

© 2024 Cummins Inc.

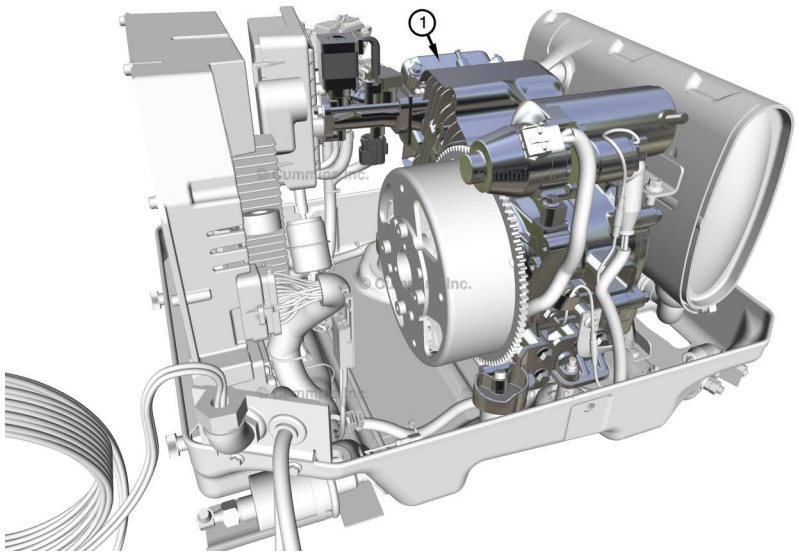

rag2da2d

Rear View

1. Engine

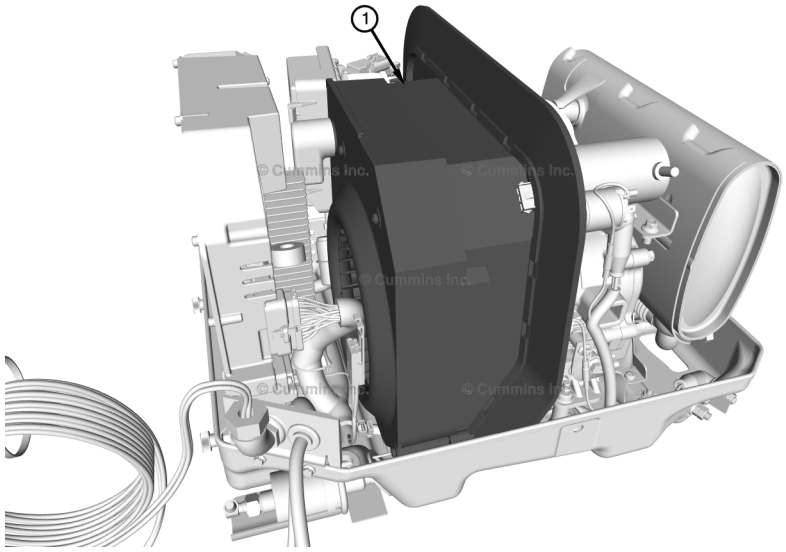

6gmrrd2n

Rear View

1. Cooling system

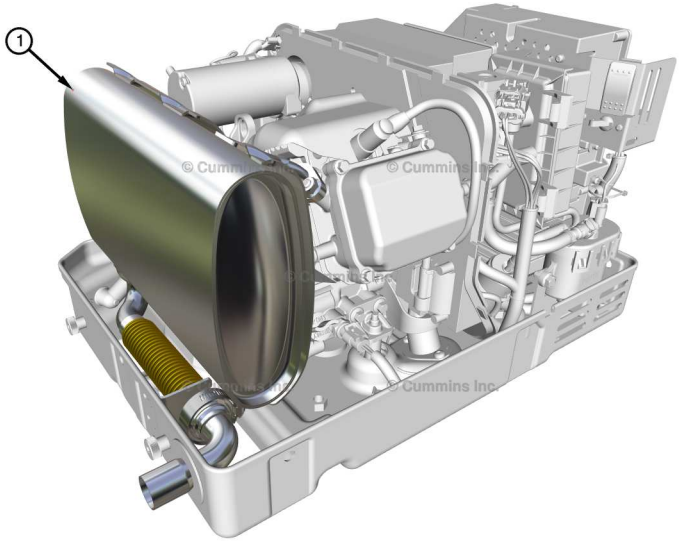

qm63dyd2

Front View

1. Exhaust system

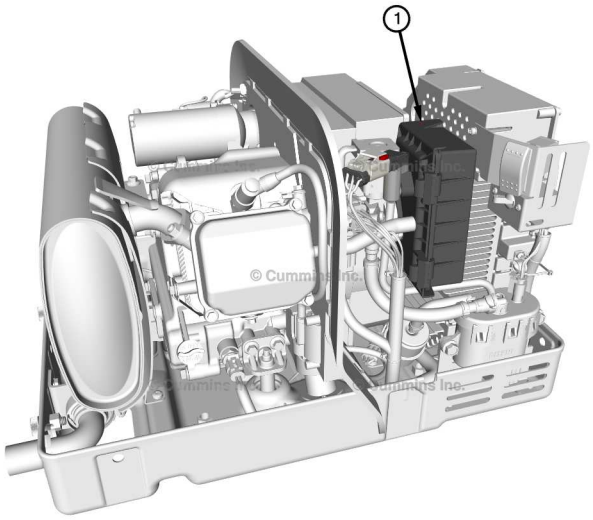

ea56e5xk

Front View

1. Air filter

© 2024 Cummins Inc.

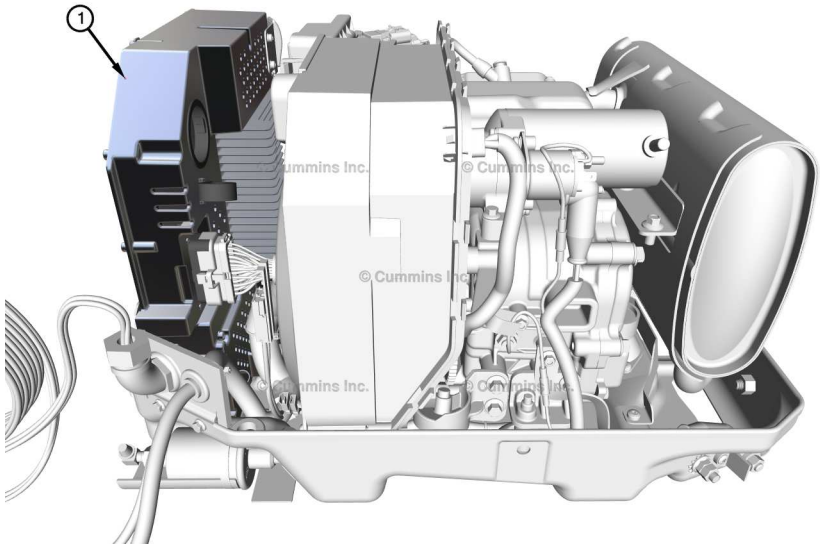

56pr395b

Rear View

1. Inverter/Controller

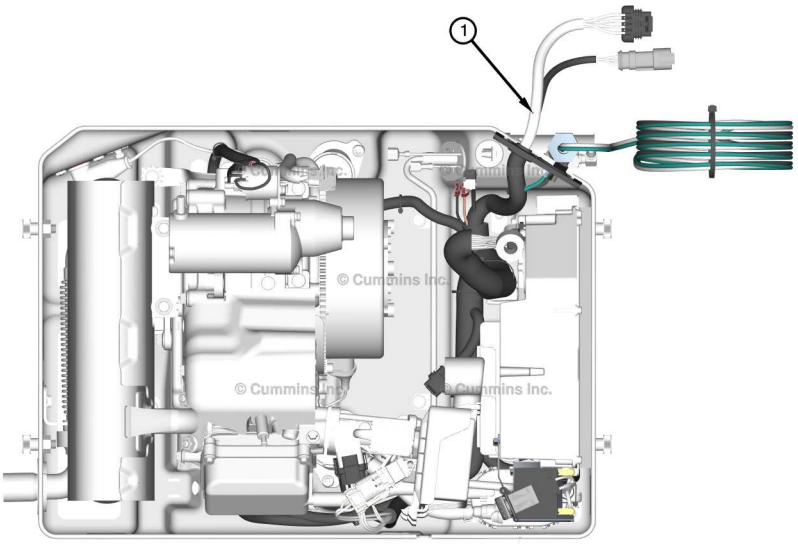

rag2bke6

Top View

1. Harness

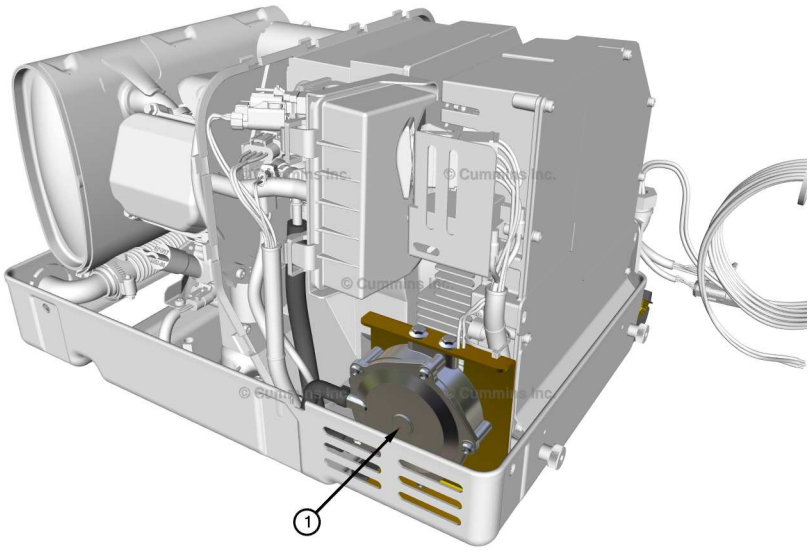

2bdrkbng

Front View

1. Liquid Propane Fuel System

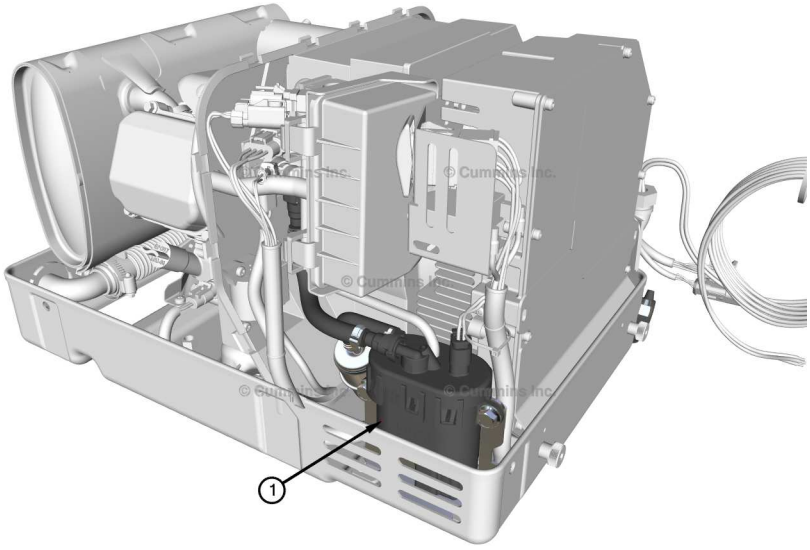

v6e4ye25

Front View

1. Gasoline Fuel System

Overview

The generator set converts mechanical energy to electrical energy.

© 2024 Cummins Inc.

6.2 Operator Interface - Overview

Diagrams

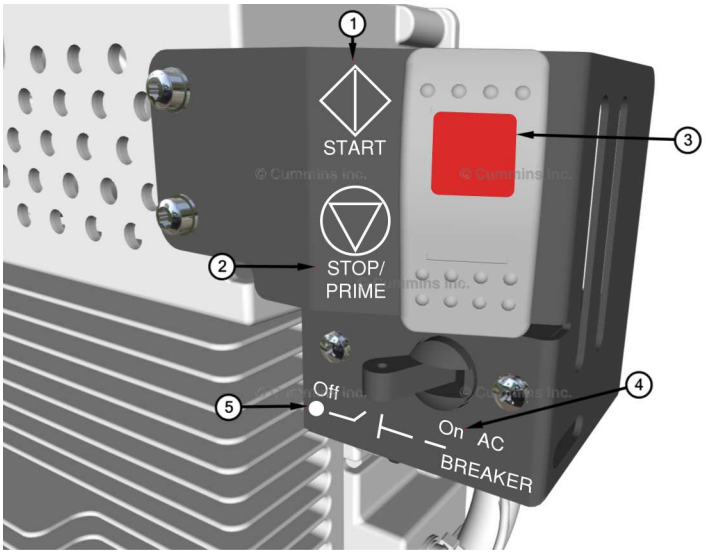

anq3gxz4

1. Control switch - START
2. Control switch - STOP/PRIME
3. Status indicator light
4. Circuit breaker - ON
5. Circuit breaker - OFF

Overview

The operator panel contains the customer controls for the generator set.

The control switch is used to perform the following functions.

- Prime Fuel System (Page 71)
- Normal Start Generator (Page 60)
- Shutdown Generator (Page 61)

The control switch contains the status indicator light, which lights up under the following conditions.

- Priming and cranking
  - The status indicator light will flash quickly.
- Running
  - The status indicator will stay on continuously.
- Shutdown on a fault code
  - The status indicator light will blink in a pattern representing the fault code number.
  - The pattern of the fault code number is as follows.
    - Long pause
    - Blinks representing the first digit of the fault code
    - Short pause
    - Blinks representing the second digit of the fault code

The circuit breaker is a secondary protection from overloading the generator set. (Page 69)

6.3 Remote Control Panel - Overview

Diagrams

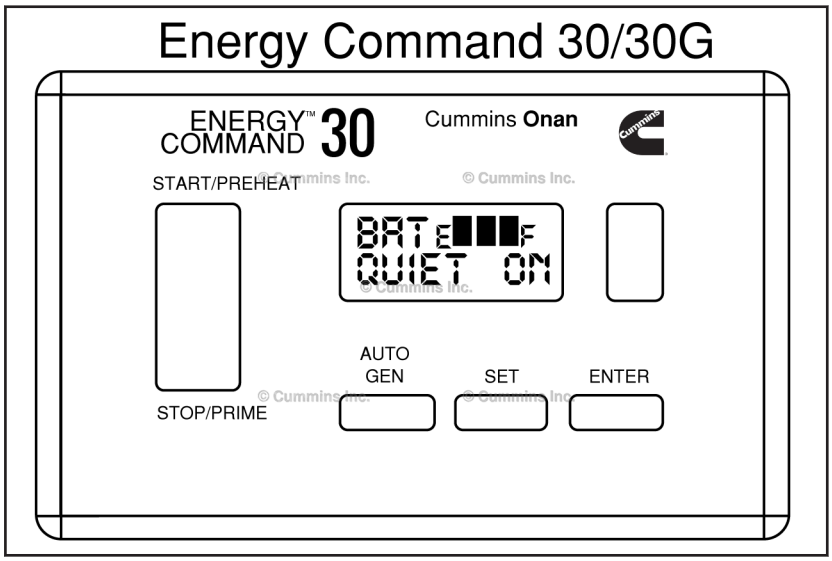

ra4gdy56

Optional Remote Control Panel

General Information

When installing a new generator set of a different model, the remote control panel software may need to be updated in order to properly display notifications and fault codes.

Overview

The EC 30 is an Automatic Generator Starting (AGS) optional system that provides both automatic and manual control of RV generator sets.

The EC 30 can be used to provide the following.

- Battery state-of-charge
- Quiet time
- Hours of service
- Fault Codes
- Automatically start the generator set if the battery becomes discharged, or when there is a run request
- Automatically stop the generator set when it does not need to be used

For more information on the EC 30, please reference Owner's Manual 0900-0541 on QuickServe Online https://quickserve.cummins.com

© 2024 Cummins Inc.

Chapter 7 - Operating Information

Contents

Operating Modes 59
7.1 Automatic Mode 59
7.2 Manual Mode 59
Operator Panel .....
Operating Instructions 59
7.3 Generator Set 59
7.9 Door 67
7.10 Circuit Breaker 69
7.11 Engine 70
7.12 Fuel System 71

 © 2024 Cummins Inc.

This Page Left Intentionally Blank

7.1 Automatic Mode - Normal Start

General Information

The generator set has no internal manual mode or automatic mode.

Many remote operator panels will allow for automatic generator starting (AGS) capability.

How To

Familiarize yourself with remote control panel operation guidelines. (Page 55)

Perform pre-start checks. (Page 75)

Start the generator set to make sure that the system is operating safely. (Page 60)

Shut off the generator set. (Page 61)

Confirm that all remote control panel settings are as desired before enabling automatic mode.

Follow remote control panel OEM instructions to enable automatic mode.

The generator set will start as demanded by the remote control panel automatic mode parameters.

No further action is required to start the generator set until automatic mode is disabled.

Make sure that automatic mode is disabled if the vehicle is being parked indoors or stored.

7.2 Manual Mode - Normal Start

General Information

The generator set has no internal manual mode or automatic mode.

Many remote operator panels will allow for automatic generator starting (AGS) capability.

How To

Familiarize yourself with remote control panel operation guidelines. (Page 55)

When the remote panel is in manual mode, follow the normal starting procedure for the generator set. (Page 60)

7.3 Generator Set - Operating Range

General Information

Generator set may not produce full rated power output when outside standard operating range.

- The generator set is rated at standard barometric pressure, humidity, and air temperature.
- Low barometric pressure (high altitude) or high ambient temperature decreases engine power.
  - As ambient temperature increases, rated generator set engine power decreases approximately 1% for every 5.5 °C (10 °F) above 25 °C (77 °F).
  - Power decreases approximately 3.5% of rated power each 305 m (1000 ft) of increase in elevation.

© 2024 Cummins Inc.

- For a generator set rated at 2800 Watts, maximum power at altitude will be as follows.
  - Below 152 m (500 ft)
    - 2800 Watts
  - 762 m (2500 ft)
    - 2600 Watts
  - 1676 m (5500 ft)
    - 2310 Watts
  - Every additional 305 m (1000 ft) results in an 98 Watt reduction in maximum power.
- For a generator set rated at 2500 Watts, maximum power at altitude will be as follows.
  - Below 152 m (500 ft)
    - 2500 Watts
  - 762 m (2500 ft)
    - 2325 Watts
  - 1676 m (5500 ft)
    - 2060 Watts
  - Every additional 305 m (1000 ft) results in an 87.5 Watt reduction in maximum power.
- It may be necessary to run fewer appliances at higher altitudes and ambient temperatures.

The generator set may require additional maintenance when operating in extreme conditions.

- Make sure that the engine lubricating oil viscosity is appropriate for the ambient temperature. (Page 83)
- When operating in dusty or dirty environments, make sure that the air filter element is clean. (Page 78)
- Do not let dirt and debris accumulate inside the generator set compartment.
- Refer to: Keep the generator set clean.

7.4 Generator Set - Normal Start

General Information

Perform pre-start checks and prime the fuel system before starting the generator set.

How To

Perform pre-start checks. (Page 75)
Prime Fuel System (Page 71)

Starting the Generator Set.

1. Turn off the air conditioner and other large appliances.
2. Position and hold the control switch to START until the generator set starts.
   - The status indicator on the switch flashes while cranking.
   - The status indicator will stay on continuously when the generator set is running.
3. If the generator set fails to start, cranking will stop in approximately 30 seconds.
   - The status indicator will blink, indicating an over crank fault.
   - Wait 5 seconds for the control to reset before trying again.
   - After 5 attempts, allow the starter motor cool down for at least 30 seconds before trying again.

© 2024 Cummins Inc.

4. For top performance and engine life, especially in colder weather, let the engine warm up for 2 minutes before connecting appliances.

7.5 Generator Set - Cold Weather Start

General Information

For top performance and engine life, especially in colder weather, let the engine warm up for 2 minutes before connecting appliances.

The generator set is rated at standard barometric pressure, humidity, and air temperature.

Low barometric pressure (high altitude) or high ambient temperature decreases engine power.

- As ambient temperature increases, rated generator set engine power decreases approximately 1% for every 5.5 °C (10 °F) above 25 °C (77 °F).
- Power decreases approximately 3.5% of rated power each 305 m (1000 ft) of increase in elevation.
- The maximum operation elevation is 4572 m (15,000 ft).

How To

See Normal Starting Procedure. (Page 60)

Let the engine warm up for 2 minutes before connecting appliances.

7.6 Generator Set - Shutdown

General Information

See Normal Start for information on starting the generator set. (Page 60)

How To

To stop the Generator Set.

1. Turn off the air conditioner and other large appliances.
2. Run the generator set for 2 minutes to allow for cool down.
3. Press the control switch in its STOP position.

7.7 Generator Set - Loading

General Information

The power rating (kW) on the generator set nameplate determines how much electrical load (motors, fans, heaters, air conditioners, and other appliances) the generator set can power.

To avoid shutdowns due to generator set overload, use the electrical ratings on the nameplates of equipment (if available) to compare the sum of the electrical loads that are likely to be used at the same time to the generator set power rating.

If the sum of the loads exceeds the generator set power rating, the generator set will shut down or its line circuit breakers will trip.

© 2024 Cummins Inc.

It is possible that the generator set circuit breaker may trip even though the sum of the steady state loads is less than the generator set power rating.

If the generator set circuit breaker trips it will be necessary to reset the circuit breaker. (Page 69)

When a large motor or air conditioner is started last or cycles off and on, the startup load is larger than its normal running load, causing the load to temporarily exceed the generator set power rating.

Typical "invisible" charging loads.

- During startup, air conditioners need "reserve" power and can draw 3–4 times the typical 1400–2400 Watts needed to run.
  - Too much baseload can prevent air conditioners from starting.
- Battery chargers are activated automatically and can draw a large load (up to 3000 Watts).
  - Manage electrical loads by adjusting battery charge rates to best suit your needs.
  - Consult your inverter/charger manual or manufacturer.

A vehicle with provisions for connecting to utility power must have an approved device to keep the generator set and utility from being interconnected.

How To

To determine load, the appliance load and generator set power are measured in terms of Watts (W) or kilowatts (kW), where 1 kilowatt (kW) = 1000 Watts (W).

- If the equipment is marked in Amps and Volts only, multiply the Amps times the Volts to obtain the load in Watts.
- Divide Watts by 1000 to obtain load in terms of kilowatts.

Typical Appliance Loads.

- Air Compressor (1hp)
  - Average Required Wattage
    - 900-1800
  - Amps
    - 7.5-15
- Air Conditioner
  - Average Required Wattage
    - 1200-2400
  - Amps
    - 10-20
- Battery Charger
  - Average Required Wattage
    - Up to 3000
  - Amps
    - 6-28
- Blender
  - Average Required Wattage
    - 450-700
  - Amps
    - 3.3-5.8

- Broiler
  - Average Required Wattage
    - 1400-1700
  - Amps
    - 11.6-14
- Broom/Vacuum
  - Average Required Wattage
    - 1000-1440
  - Amps
    - 8.3-12
- CD/MP3 Player & Speakers
  - Average Required Wattage
    - 85
  - Amps
    - 0.7
- Coffeepot
  - Average Required Wattage
    - 900-1200
  - Amps
    - 7.5-10
- Computer
  - Average Required Wattage
    - 60-270
  - Amps
    - 0.5-2.25
- Laptop
  - Average Required Wattage
    - 20-50
  - Amps
    - 0.16-0.41
- Converter
  - Average Required Wattage
    - 500-1000
  - Amps
    - 4-8
- Curling Iron
  - Average Required Wattage
    - 20-50
  - Amps
    - 0.16-0.41

© 2024 Cummins Inc.

- Dishwasher
  - Average Required Wattage
    - 1200-2400
  - Amps
    - 10-20
- Drill
  - Average Required Wattage
    - 250-1000
  - Amps
    - 2-8
- Electric Blanket
  - Average Required Wattage
    - 60-100
  - Amps
    - 0.5-0.8
- Fan
  - Average Required Wattage
    - 10-175
  - Amps
    - 0.08-1.45
- Flat Iron
  - Average Required Wattage
    - 40-80
  - Amps
    - 0.3-0.6
- Frying Pan/Wok
  - Average Required Wattage
    - 1000-1350
  - Amps
    - 8-11.25
- Game Console
  - Average Required Wattage
    - 19-200
  - Amps
    - 0.16-1.6
- Hair Dryer
  - Average Required Wattage
    - 1200-1875
  - Amps
    - 10-15.6

© 2024 Cummins Inc.

- Iron
  - Average Required Wattage
    - 1000-1800
  - Amps
    - 8-15
- Light Bulbs
  - Average Required Wattage
    - 13-100
  - Amps
    - 0.1-0.8
- Microwave/Convection Oven
  - Average Required Wattage
    - 750-1100
  - Amps
    - 6.25-9.2
- Radio
  - Average Required Wattage
    - 50-200
  - Amps
    - 0.4-1.6
- Refrigerator
  - Average Required Wattage
    - 400-1000
  - Amps
    - 3.3-8
- Shaver
  - Average Required Wattage
    - 15-20
  - Amps
    - 0.12-0.16
- Space Heater
  - Average Required Wattage
    - 750-1500
  - Amps
    - 6.25-12.5
- Stove
  - Average Required Wattage
    - 900-2500
  - Amps
    - 7.5-20-8

© 2024 Cummins Inc.

- Television
  - Average Required Wattage
    - 43-600
  - Amps
    - 0.35-5
- Toaster
  - Average Required Wattage
    - 800-1400
  - Amps
    - 6.6-11.6
- VCR/DVD/Blu-ray Player
  - Average Required Wattage
    - 6-30
  - Amps
    - 0.05-0.25
- Washer/Dryer
  - Average Required Wattage
    - 350-500/1800-5000
  - Amps
    - 3-4/15-42
- Water Heater
  - Average Required Wattage
    - 1000-1500
  - Amps
    - 8-12.5
- Water pump
  - Average Required Wattage
    - 250-1100
  - Amps
    - 2-9.16

7.8 Generator Set - Exercise

General Information

Exercising a generator set will:

- Drive off moisture.
- Lubricate the engine.
- Replace stale fuel in fuel lines.
- Remove oxides from electrical contacts and generator slip rings.
- Help highlight any performance issues.
- Result in better starting, longer engine life, and greater reliability.

A single 2 hour exercise period is better than several shorter periods.

How To

Exercise the generator set at least 2 hours each month if use is infrequent.

Run the generator set at approximately 1/2 rated power.

7.9 Door - Remove and Install

Tools Summary		
Part Name	**Part Number**	**Quantity**
Solvent		1
Clean Rag		1

Exploded View

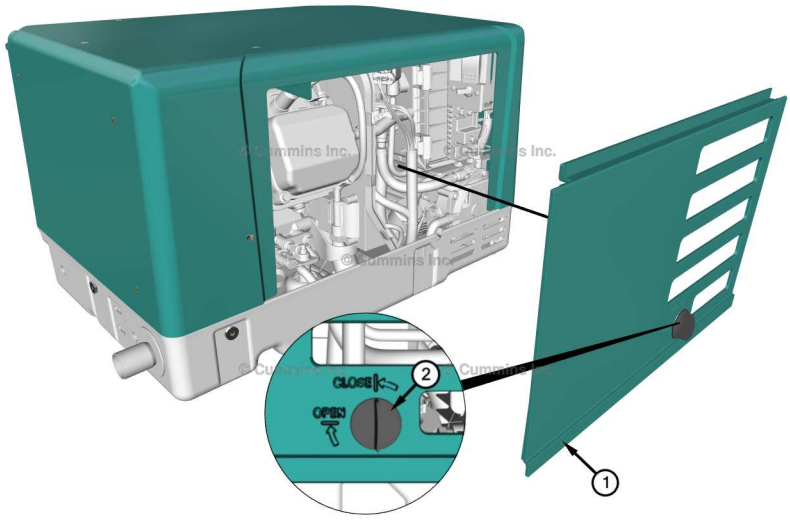

9dkv9r9q

1. Enclosure door
2. Enclosure door latch

General Information

All components handled in this procedure weigh less than 23 kg [50 lb].

© 2024 Cummins Inc.

Remove

Turn the latch clockwise to open.

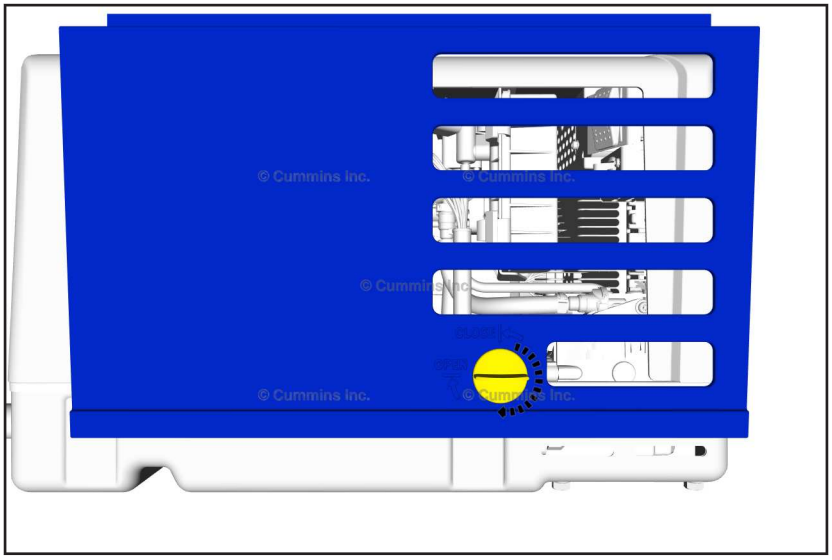

zrdk5w9r

Remove the enclosure door.

Clean

	**CAUTION**	**Solvent Exposure** **Skin and eye irritation may occur.** **Follow manufacturer's instructions for use. Wear appropriate personal protective equipment.**

Clean the components removed using the following.

Tool Name	Tool Type	Part Number	Quantity
Solvent	Generic		1
Clean Rag	Generic		1

Check

Check the enclosure door.

Repair or replace if any of the following are found.

- Bent
- Broken, cracked
- Cosmetically unacceptable
- Misassembled
- Mismachined
- Wrong Parts

Install

Install the enclosure door.

Turn the latch counterclockwise to close.

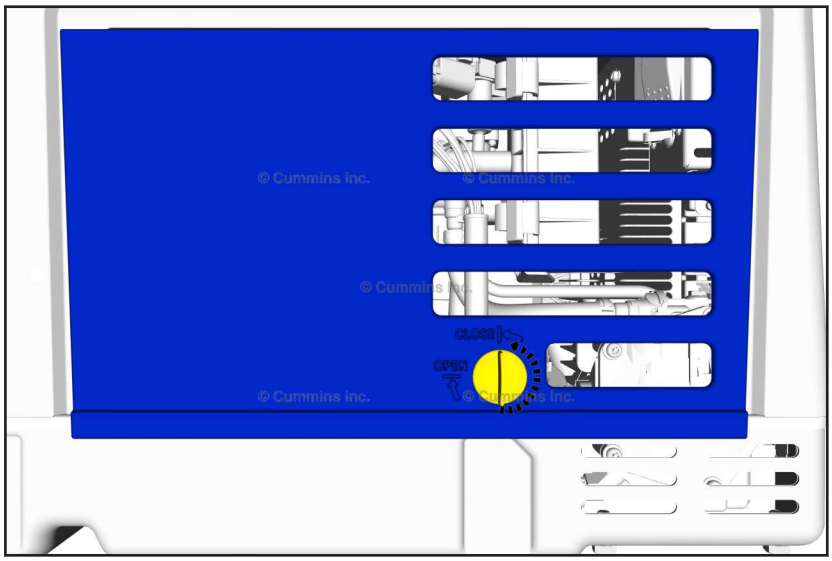

dmeyr26n

7.10 Circuit Breaker - Reset

General Information

The generator set has protections to prevent over-loading, in the event of too many loads being connected or a short circuit in the customer wiring system.

- The generator set will shut down with a fault code in the event the customer load demand exceeds the generator set rated load capacity.
  - This functionality may be referred to as the virtual circuit breaker.
  - The generator set will shut down with Fault Code 38 when the virtual circuit breaker trips.
- A physical breaker is incorporated into the generator set for secondary protection.
  - The generator set will continue to run if the physical breaker is tripped.

Preparatory Steps

□ Shutdown None (Page 61)
□ Remove Enclosure Door (Page 68)

How To

Disconnect as many appliances and loads as possible.

If the virtual circuit breaker trips, no further action is required before restarting the generator set.

If the physical breaker trips, perform the following steps.

- Position the circuit breaker switch in the OFF position.
- Reset the circuit breaker switch to the ON position.

© 2024 Cummins Inc.

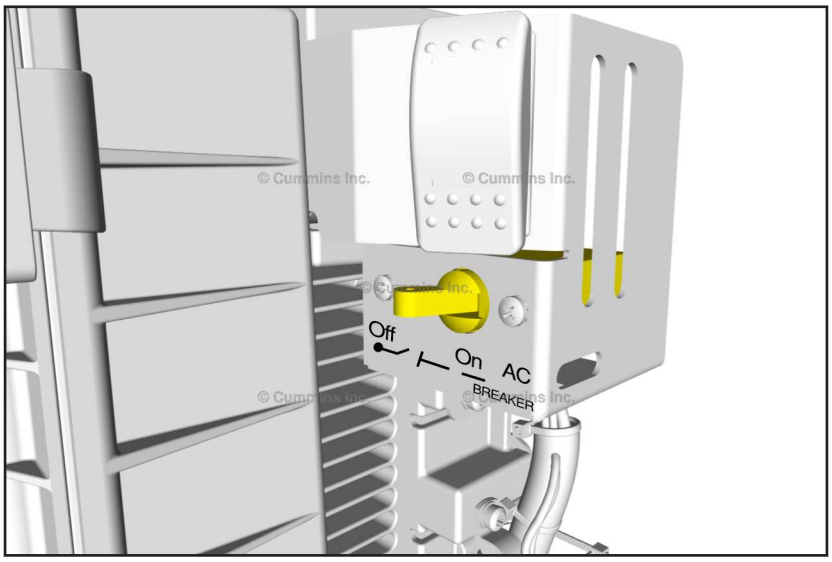

yr9q54xe

Check for a short circuit in the customer wiring system.

- Restart the generator set. (Page 60)
- If the circuit breaker immediately trips, there may be a short circuit in the customer wiring system.
- Repair any short circuit in the customer wiring system before restarting the generator set.

Finishing Steps

□ Install Enclosure Door (Page 69)

7.11 Engine - Break-In

General Information

Correct care of your Cummins product will result in longer life, better performance, and more economical operation.

How To

Start the generator set. (Page 60)

Load the generator set according to the following schedule. (Page 61)

- 50% of rated load for the first two hours
- 75% of rated load for the next two hours

Shutdown Generator, as necessary (Page 61)

Refer to the maintenance schedule and perform the required early life maintenance according to the schedule.

7.12 Fuel System - Prime

General Information

Perform pre-start checks before priming. (Page 75)

Prime

Priming the fuel system.

- The fuel system should be primed after any of the following conditions.
  - The generator set has not run within 8 hours.
  - The generator set has run out of fuel.
  - The fuel filter has been replaced.
- Position the control switch to STOP/PRIME for 30 seconds.
  - The status indicator is illuminated when the pump is on.

© 2024 Cummins Inc.

Chapter 8 - Maintenance

Contents

Schedule 75
8.1 Generator Set 75
Maintenance Tasks 75
8.4 Generator Set 75
8.5 Crankcase Breather Hose 76
8.6 Air Filter Element 78
8.7 Lubricating Oil 81
8.9 Lubricating Oil Dipstick 86
8.10 Ignition Coil 88
8.11 Spark Plugs 90
8.13 Fuel Filter - Gasoline Electronic Fuel Injection 93

 © 2024 Cummins Inc.

This Page Left Intentionally Blank

8.1 Generator Set - Daily Check

Perform daily, or every 8 hours

Task	Daily	Page
Inspect the generator set.(As necessary)	X	

8.2 Generator Set - One Time Only

Task	Hours	Page
Replace the lubricating oil.	20	

8.3 Generator Set - Routine Maintenance

Task	Hours	Years	Page
Replace the lubricating oil.	167	1	
Clean the air filter element	167		
Replace the spark plug.	500		
Replace the fuel filter.	500		
Adjust the valve lash.	500		
Replace the air filter element.	500		

8.4 Generator Set - Inspect

General Information

Perform pre-start checks before the first start of the day and after every 8 hours of operation.

Preparatory Steps

□ Remove Door, as necessary (Page 68)

Inspect

Familiarize yourself with generator set operation guidelines.

- Keep a maintenance record.
- Perform any required maintenance.

© 2024 Cummins Inc.

	**WARNING**	**Gasoline Exposure** **Asphyxiation and explosion risks are present. Gas is heavier than air.** **Avoid open flames and ignition sources. Make sure there is proper ventilation. Refer to "General Safety" for additional information.**

Check for signs of fuel leaks and that the fuel system components and connections are properly secured and free of damage.

- Check that flexible fuel hose sections are free from cuts, cracks, and abrasions.
- Make sure fuel lines are not rubbing against other parts.
- Do not operate the generator set until fuel system issues have been repaired.

	**WARNING**	**Exhaust Gas Exposure** **Identified to be toxic and carcinogenic.** **Avoid inhalation. Make sure there is proper ventilation setup. Follow local guidelines and legislation.**

Check for signs of exhaust leaks and that the exhaust system properly in place, secured, and free of damage.

- Check that the generator set compartment is properly sealed off from the vehicle cab.
- Make sure all vehicle CO detectors are working properly.
- Park the vehicle away from walls, snow banks, high grass, and brush so generator set exhaust gases are able to disperse away from the vehicle.
- Do not operate power ventilators or fans in a manner that would draw exhaust gasses into the vehicle.
- Do not operate the generator set until exhaust system issues have been repaired.

Check that the generator set housing is properly in place and secured.

Check that all generator set mounting brackets and hardware are properly in place and secured.

Check that all electrical connections are properly connected and secured.

- Electrical connections include customer AC output wires, remote control harness wires, and battery cables.
- Check that the circuit breaker is in the desired position.

Finishing Steps

□ Install Door, as necessary (Page 69)

8.5 Crankcase Breather Hose - Remove and Install

Tools Summary		
Part Name	**Part Number**	**Quantity**
Solvent		1
Clean Rag		1

Exploded View

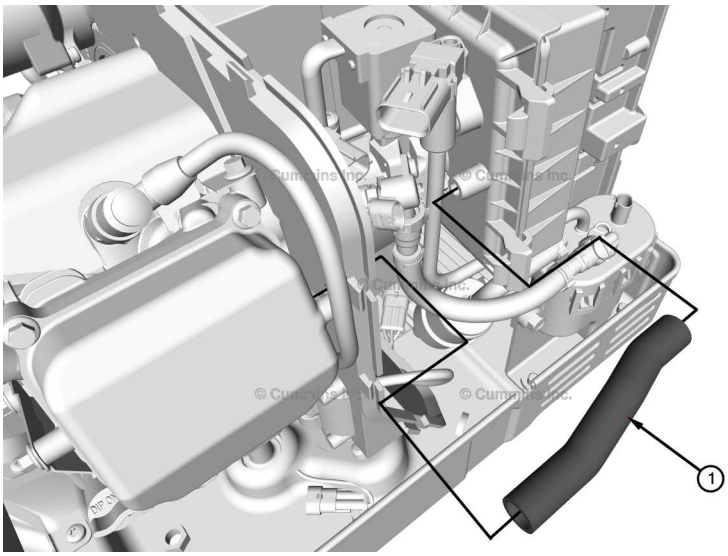

nnbx65m2

1. Crankcase breather hose

General Information

All components handled in this procedure weigh less than 23 kg [50 lb].

Preparatory Steps

□ Lock-Out-Tag-Out Equipment (Page 26)
□ Remove Enclosure Door (Page 68)

Remove

Remove the following.

- Hose clamps - Discard
- Crankcase breather hose

Clean

	**CAUTION**	**Solvent Exposure** **Skin and eye irritation may occur.** **Follow manufacturer's instructions for use. Wear appropriate personal protective equipment.**

Clean the components removed using the following.

Tool Name	Tool Type	Part Number	Quantity
Solvent	Generic		1
Clean Rag	Generic		1

© 2024 Cummins Inc.

Check

Check the crankcase breather hose.

Replace if any of the following are found.

- Bent
- Broken
- Cosmetically unacceptable
- Clogged
- Leaks - Fuel/gas air mixture
- Misassembled
- Wrong Parts

Install

Install the following.

- Crankcase breather hose
- Hose clamps - New

Finishing Steps

□ Install Enclosure Door (Page 69)
□ Re-Energize Equipment (Page 27)

8.6 Air Filter Element - Remove and Install

Tools Summary		
Part Name	**Part Number**	**Quantity**
Compressed Air		1

Exploded View

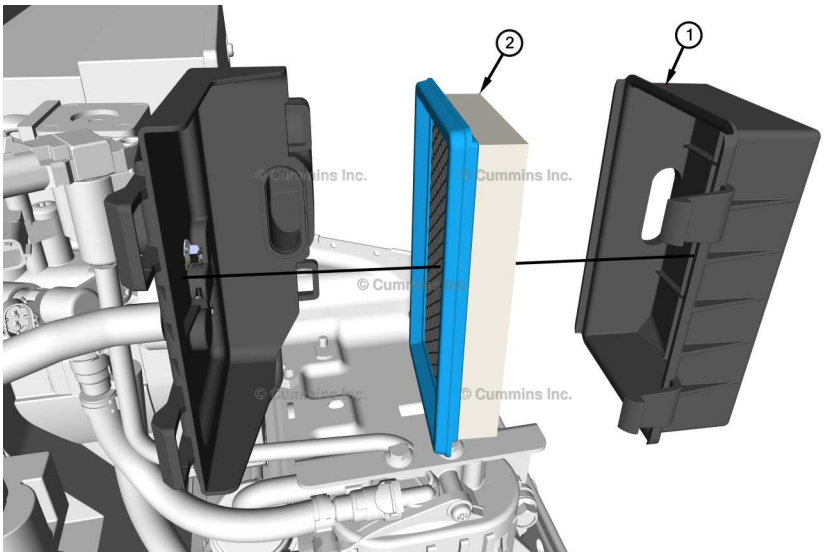

2bdr4rg4

1. Air Box Cover
2. Air filter element

General Information

All components handled in this procedure weigh less than 23 kg [50 lb].

Preparatory Steps

- □ Lock-Out-Tag-Out Equipment (Page 26)
- □ Remove Enclosure Door (Page 68)

Remove

Remove the following.

- Air box cover
- Air filter element

© 2024 Cummins Inc.

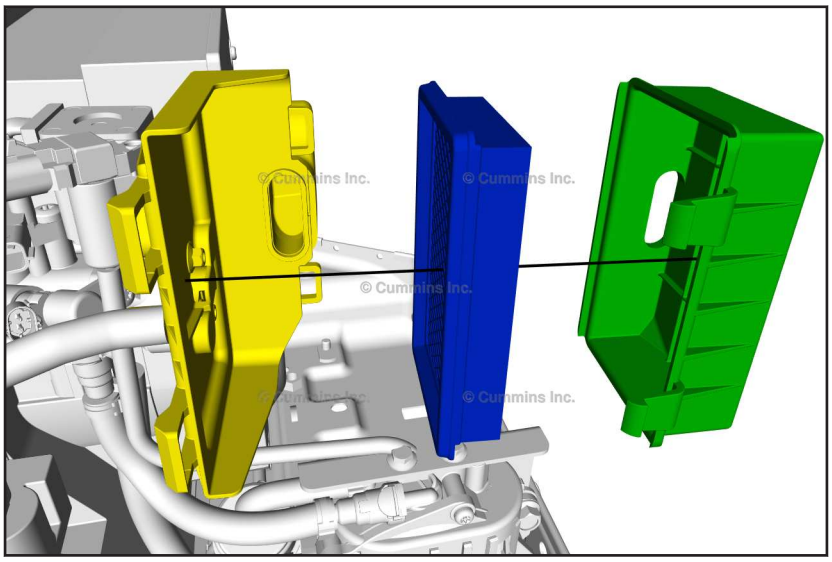

rag2zkkq

Clean

	**CAUTION**	**Compressed Air** **Beware of flying debris and dirt.** **Wear appropriate personal protective equipment.**

Clean the components removed using the following.

Tool Name	Tool Type	Part Number	Quantity
Compressed Air	Generic		1

Check

Check the air filter element.

Repair or replace if any of the following are found.

- Bent
- Broken, cracked
- Cosmetically unacceptable
- Damaged
- Clogged
- Loose
- Misassembled
- Missing parts
- Wrong Parts

Install

Install the following.

- Air filter element
  - Rubber seal faces left, towards the throttle body and engine

- Air box cover

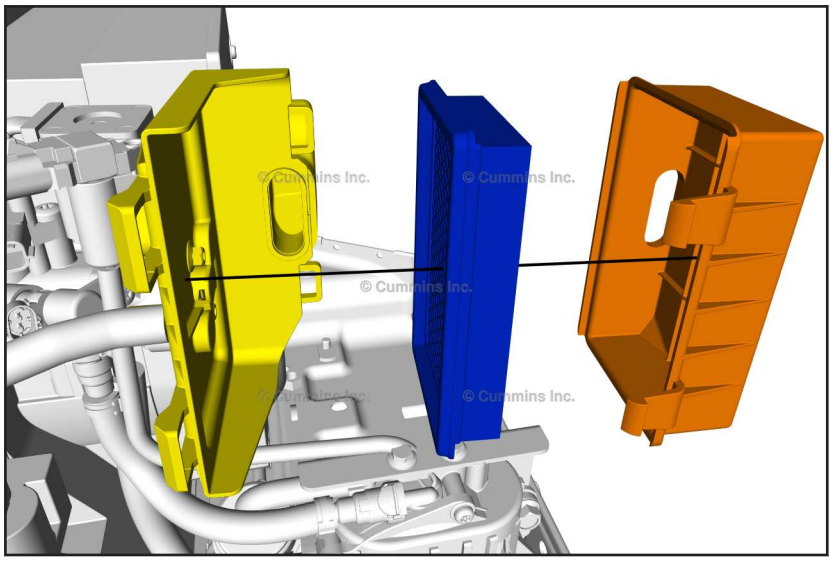

pp4knbga

Finishing Steps

- □ Install Enclosure Door (Page 69)
- □ Re-Energize Equipment (Page 27)

8.7 Lubricating Oil - Level Check

Diagrams

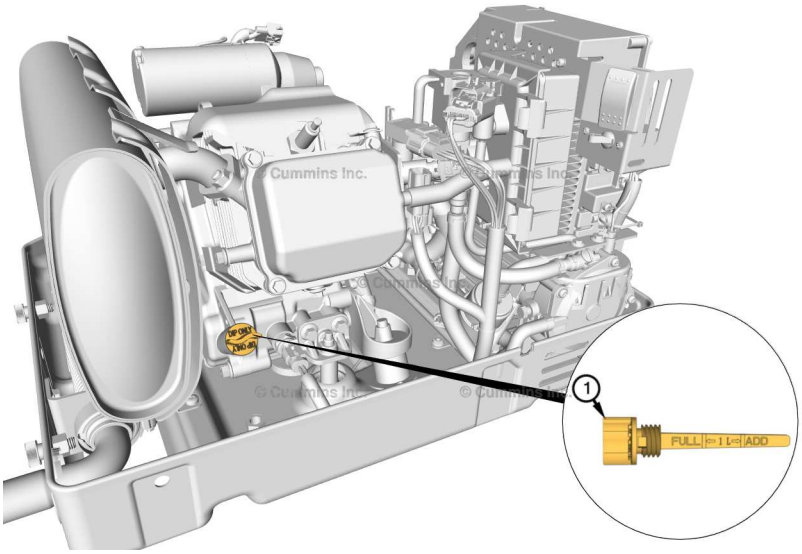

dmeynddv

1. Lubricating oil dipstick

© 2024 Cummins Inc.

General Information

This procedure is used to determine if the components are within specification.

Preparatory Steps

- □ Lock-Out-Tag-Out Equipment (Page 26)
- □ Remove Enclosure Door (Page 68)
- □ Remove Lubricating Oil Dipstick (Page 87)

Check

Clean Lubricating Oil Dipstick (Page 87)

Place the lubricating oil dipstick in the oil fill neck fully, without screwing it in.

- Make sure that the lubricating oil dipstick is parallel to the oil fill neck.

Remove the lubricating oil dipstick.

Check that the lubricating oil level is to the FULL mark on the dipstick.

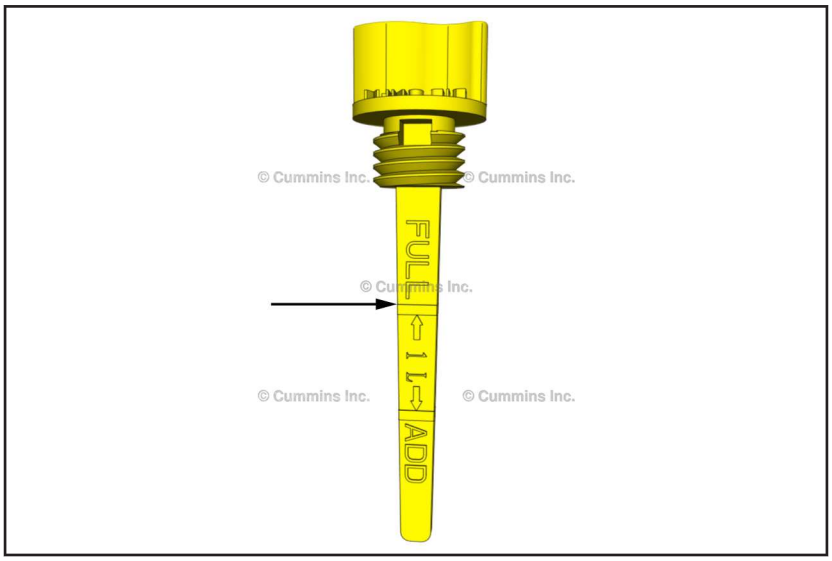

rag2zmnq

If the oil level is below FULL, add a small quantity of oil as necessary, and repeat until FULL mark is reached.

Finishing Steps

- □ Install Lubricating Oil Dipstick (Page 88)
- □ Install Enclosure Door (Page 69)
- □ Re-Energize Equipment (Page 27)

8.8 Lubricating Oil - Drain and Fill

Tools Summary		
Part Name	**Part Number**	**Quantity**
Drain Pan		1
Funnel		1

General Information

All components handled in this procedure weigh less than 23 kg [50 lb].

Preparatory Steps

- □ Lock-Out-Tag-Out Equipment (Page 26)
- □ Remove Enclosure Door (Page 68)
- □ Remove Lubricating Oil Dipstick (Page 87)

Drain

Remove the oil drain cap.

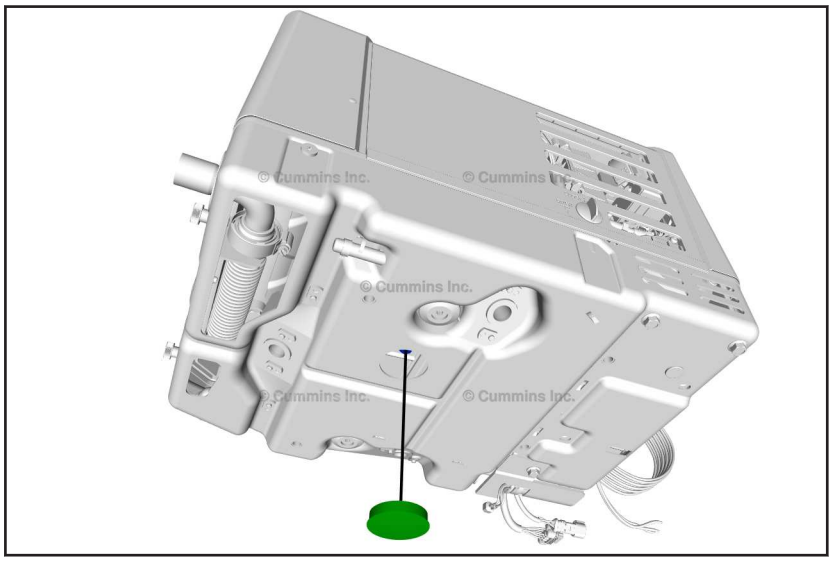

ea56nb33

	**CAUTION**	**Hot Lubricating Oil Spray** **Beware of fluid splash or fluid spray which may cause injury.** **Wear appropriate personal protective equipment.**

Prepare to capture lubricating oil before removing drain plug.

Tool Name	Tool Type	Part Number	Quantity
Drain Pan	Generic		1

© 2024 Cummins Inc.

Remove the oil drain plug.

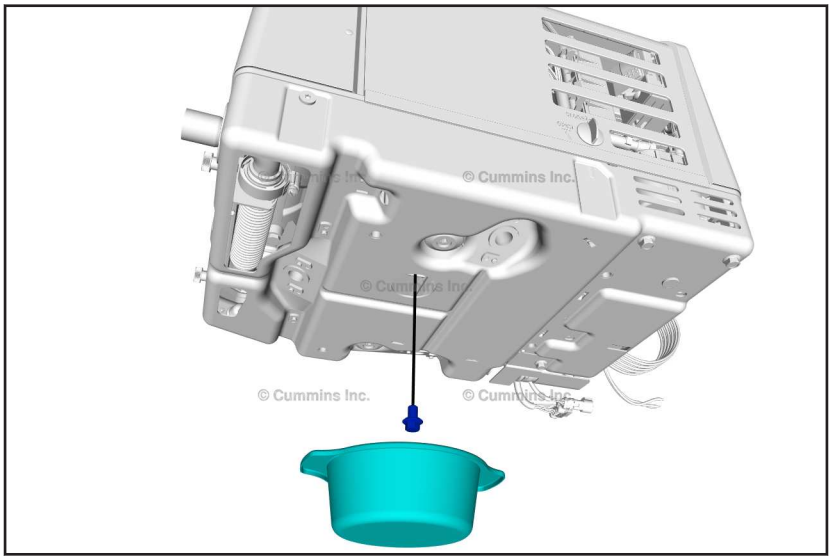

gz9y6463

Allow lubricating oil to drain completely.

Fill

Install the oil drain plug.

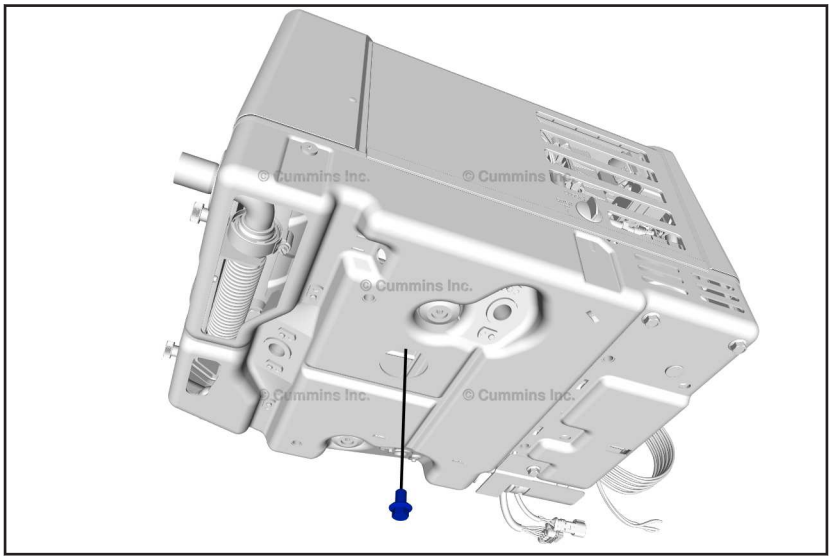

9dkvp62z

Oil drain plug	
Metric	**U.S.**
20 N·m	177 in-lb

Install the oil drain cap.

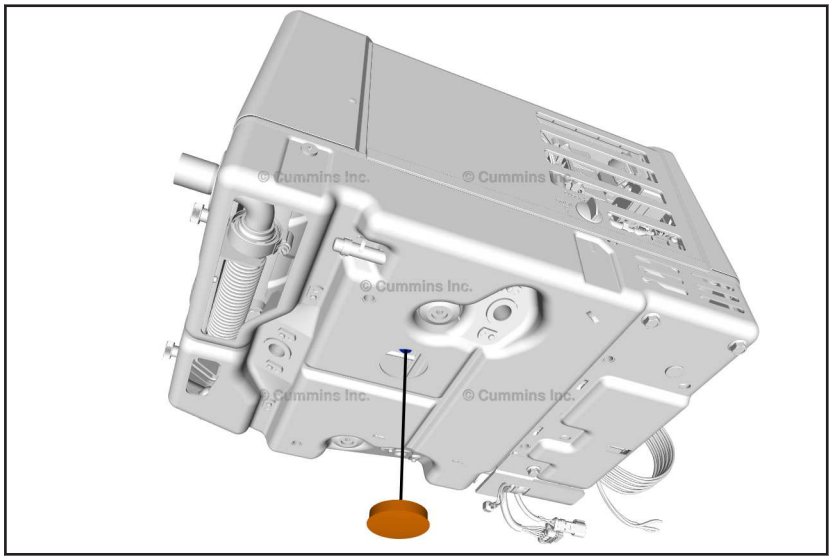

ea56wrzm

Remove Lubricating Oil Dipstick (Page 87)

Fill the lubricating oil pan with clean oil.

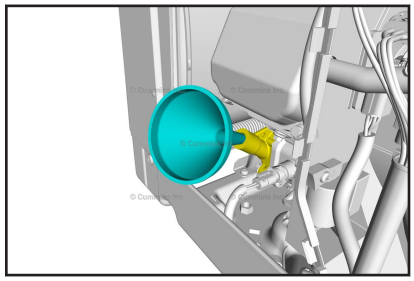

zrdk6nyv

Tool Name	Tool Type	Part Number	Quantity
Funnel	Generic		1

Use only API oil category SN or newer for spark ignited engines.

Select the appropriate oil viscosity according to the following ambient temperature recommendations.

- 0 ˚C (32 ˚F) and higher
  - 30
- -18 ˚C to 27 ˚C (0 ˚F to 80 ˚F)
  - 10W-30
- -28 ˚C to 10 ˚C (-20 ˚F to 50 ˚F)
  - 5W-30

© 2024 Cummins Inc.

Add to the desired quantity of lubricating oil.

Lubricating oil volume		
	Metric	**U.S.**
NOM	.95 mL	1 US qt
Out Of Range		
Use the lubricating oil dipstick to determine additional oil volume required.		

Install Lubricating Oil Dipstick (Page 88)
Check Lubricating Oil (Page 82)

Finishing Steps

- □ Install Lubricating Oil Dipstick (Page 88)
- □ Install Enclosure Door (Page 69)
- □ Re-Energize Equipment (Page 27)

8.9 Lubricating Oil Dipstick - Remove and Install

Tools Summary		
Part Name	**Part Number**	**Quantity**
Lint-Free Cloth		1

Exploded View

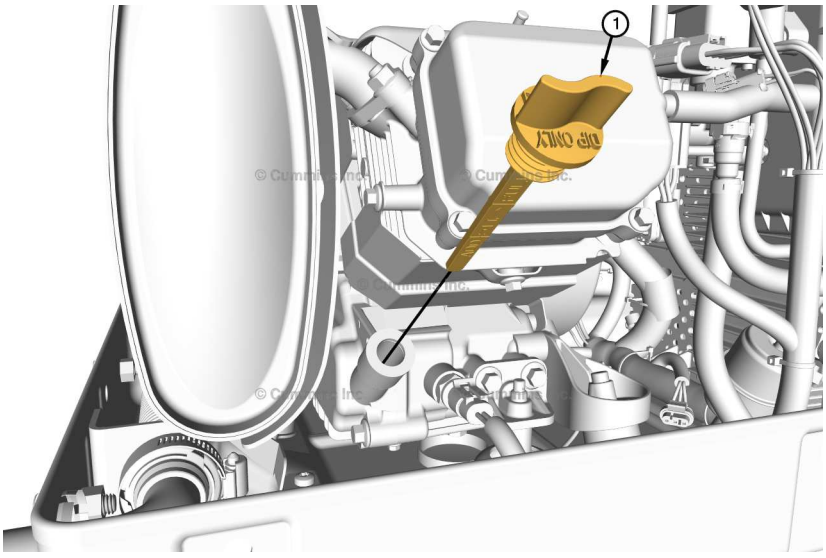

pp4kd54b

1. Lubricating oil dipstick

General Information

All components handled in this procedure weigh less than 23 kg [50 lb].

Preparatory Steps

□ Remove Enclosure Door (Page 68)

Remove

	**WARNING**	**High Temperature** **Risk of burns or melting of items may result.** **Avoid contact. Wear appropriate personal protective equipment.**

	**CAUTION**	**Hot Lubricating Oil Spray** **Beware of fluid splash or fluid spray which may cause injury.** **Wear appropriate personal protective equipment.**

Remove the lubricating oil dipstick.

Clean

Clean the components removed using the following.

Tool Name	Tool Type	Part Number	Quantity
Lint-Free Cloth	Generic		1

Check

Check the lubricating oil dipstick.

Repair or replace if any of the following are found.

- Bent
- Broken, cracked
- Cosmetically unacceptable
- Leaks - oil
- Misassembled
- Mismachined
- Wrong Parts

Check the o-ring.

Replace if any of the following are found.

- Broken, cracked
- Cosmetically unacceptable
- Eroded, pitted, fretted, flaked, debonded
- Leaks - oil
- Misassembled
- Worn

© 2024 Cummins Inc.

- Wrong Parts

Install

Install the lubricating oil dipstick.

Finishing Steps

□ Install Enclosure Door (Page 69)

8.10 Ignition Coil - Remove and Install

Tools Summary		
Part Name	**Part Number**	**Quantity**
QD Contact Cleaner		1
Lint-Free Cloth		1

Exploded View

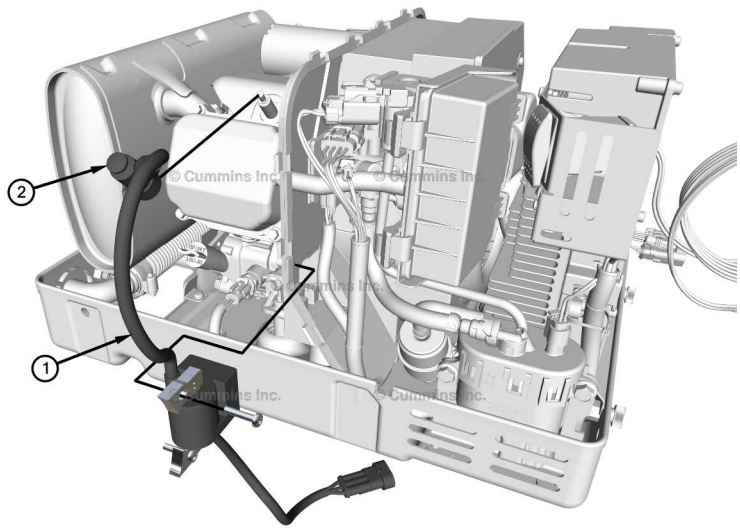

3znkmap6

1. Ignition coil
2. Spark plug boot

General Information

All components handled in this procedure weigh less than 23 kg [50 lb].

Preparatory Steps

□ Lock-Out-Tag-Out Equipment (Page 26)
□ Remove Enclosure Door (Page 68)

Disconnect

Disconnect the following.

- Wiring harness from ignition coil
- Spark plug boot

Remove

Remove the following.

- Capscrews
- Ignition coil

Clean

	**CAUTION**	**Solvent Exposure** **Skin and eye irritation may occur.** **Follow manufacturer's instructions for use. Wear appropriate personal protective equipment.**

Clean the components removed using the following.

Tool Name	Tool Type	Part Number	Quantity
QD Contact Cleaner	Generic		1
Lint-Free Cloth	Generic		1

Check

Check the ignition coil.

Repair or replace if any of the following are found.

- Broken
- Misassembled
- Shorted

Check the spark plug wire.

Replace if any of the following are found.

- Broken, cracked
- Misassembled
- Poor connection
- Open circuit
- Shorted

Check the spark plug boot.

Repair or replace if any of the following are found.

- Broken
- Loose
- Misassembled

© 2024 Cummins Inc.

Install

Install the following.

- Ignition coil
- Capscrews

Ignition coil capscrews	
Metric	**U.S.**
3 N·m	27 in-lb

Connect

Connect the following.

- Spark plug boot
- Wiring harness to ignition coil

Finishing Steps

□ Install Enclosure Door (Page 69)
□ Re-Energize Equipment (Page 27)

8.11 Spark Plugs - Remove and Install

Tools Summary		
Part Name	**Part Number**	**Quantity**
Wire Brush		1

Exploded View

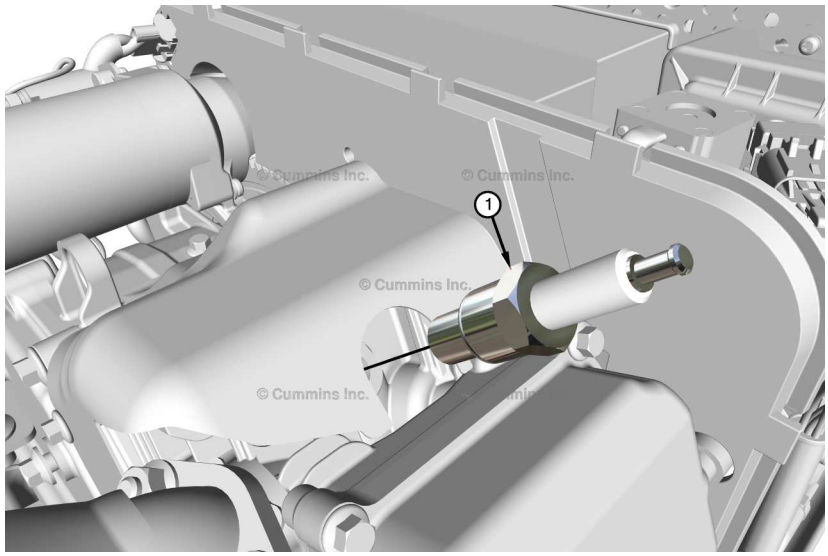

v6e4zwrb

1. Spark plug

General Information

All components handled in this procedure weigh less than 23 kg [50 lb].

Preparatory Steps

- □ Lock-Out-Tag-Out Equipment (Page 26)
- □ Remove Enclosure Door (Page 68)
- □ Disconnect Ignition Coil, as necessary (Page 89)

Remove

Allow the engine to cool.

Remove the spark plug.

Clean

Clean the components removed using the following.

Tool Name	Tool Type	Part Number	Quantity
Wire Brush	Generic		1

Check

Inspect Spark Plugs (Page 92)

Check the spark plug.

Repair or replace if any of the following are found.

- Adjusted high
- Adjusted low
- Broken, cracked
- Carboned
- Corroded
- Leaks - compression
- Mismachined

Install

Allow the engine to cool.

Install the spark plug.

Spark Plug	
Metric	**U.S.**
27 N·m	239 in-lb

Finishing Steps

- □ Connect Ignition Coil (Page 90)
- □ Install Enclosure Door (Page 69)
- □ Re-Energize Equipment (Page 27)

© 2024 Cummins Inc.

8.12 Spark Plugs - Inspect

Tools Summary		
Part Name	**Part Number**	**Quantity**
Feeler Gauge		1

General Information

This procedure is used to determine if the components are within specification.

Preparatory Steps

- □ Lock-Out-Tag-Out Equipment (Page 26)
- □ Remove Spark Plugs (Page 91)

Inspect

Measure the spark plug gap.

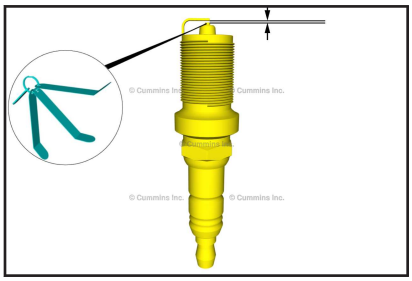

yr9qbaed

Tool Name	Tool Type	Part Number	Quantity
Feeler Gauge	Generic		1

Measure the spark plug gap.

Spark plug gap		
	Metric	**U.S.**
NOM	0.8 mm	0.0315 in
Variance	0.1 mm	0.004 in
Out Of Range		
Adjust the spark plug gap.		

Finishing Steps

- □ Install Spark Plugs (Page 91)
- □ Re-Energize Equipment (Page 27)

8.13 Fuel Filter - Gasoline Electronic Fuel Injection - Remove and Install

Tools Summary		
Part Name	**Part Number**	**Quantity**
Pinch Off Pliers		1
Clean Rag		2
Solvent		1

Exploded View

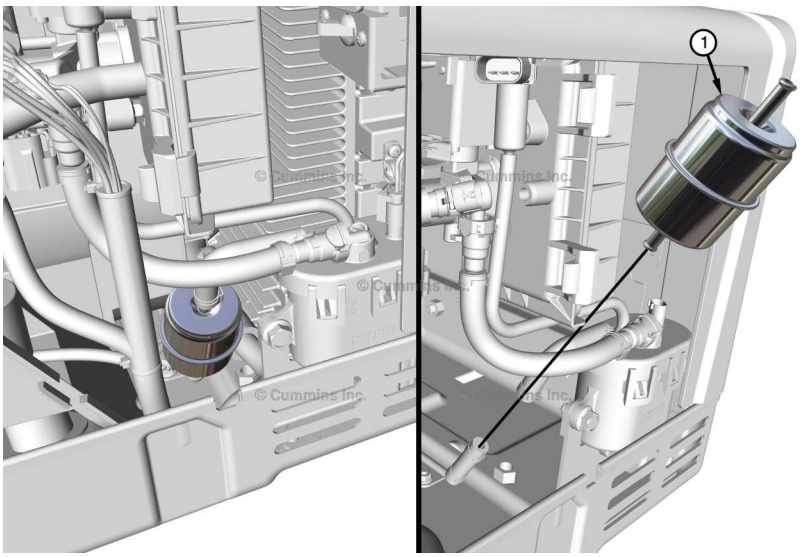

mda2gape

1. Fuel filter

General Information

All components handled in this procedure weigh less than 23 kg [50 lb].

Preparatory Steps

- □ Lock-Out-Tag-Out Equipment (Page 26)
- □ Remove Enclosure Door (Page 68)

Disconnect

Seal off fuel supply before disconnecting fuel lines.

Tool Name	Tool Type	Part Number	Quantity
Pinch Off Pliers	Generic		1

© 2024 Cummins Inc.

	**WARNING**	**Gasoline Exposure** **This substance is flammable.** **Avoid open flames and ignition sources.**

Prepare to capture excess fuel when disconnecting fuel lines.

Tool Name	Tool Type	Part Number	Quantity
Clean Rag	Generic		1

Disconnect the following.

- Hose clamps - Discard
- Fuel hoses

Remove

Remove the fuel filter.

Clean

	**CAUTION**	**Solvent Exposure** **Skin and eye irritation may occur.** **Follow manufacturer's instructions for use. Wear appropriate personal protective equipment.**

Clean the components removed using the following.

Tool Name	Tool Type	Part Number	Quantity
Solvent	Generic		1
Clean Rag	Generic		1

Check

Check the fuel filter.

Replace if any of the following are found.

- Broken, cracked
- Clogged
- Leaks - fuel
- Misassembled
- Mismachined
- Wrong Parts

Install

Note the intended direction of fuel flow when installing the fuel filter.

Install the following.

- Fuel filter

- Hose clamps - New

Connect

Connect the fuel hoses.

Finishing Steps

□ Install Enclosure Door (Page 69)
□ Re-Energize Equipment (Page 27)

© 2024 Cummins Inc.

Chapter 9 - Troubleshooting

Contents

9.1 Generator Set 99

 © 2024 Cummins Inc.

This Page Left Intentionally Blank

9.1 Generator Set - Troubleshooting Fault Codes

General Information

Troubleshooting fault codes is the quickest way to return the generator set to full operation.

All fault codes will shut the generator set down.

The status indicator light on the control switch will flash to indicate the fault code. (Page 54)

Overview

Fault Code 1: High Engine Temperature

- Reason
  - Engine oil temperature is above the engine protection limit.
- Effect
  - The generator set will shut down.
- Troubleshooting
  - Operating conditions are extreme (Page 59)
    - Take note of the generator set operating range.
    - Reduce generator set load.
  - Blocked cooling air flow (Page 75)
    - Check the generator set intake vents for blockages or debris.
    - Check the generator set exhaust ventilation area for clear space to vent hot air away from the generator set.
  - Service interval warning
    - Perform scheduled maintenance as necessary.
  - Contact your local dealer or distributor.

Fault Code 4: Over Crank

- Reason
  - RPM does not reach engine operating speed following cranking.
- Effect
  - The generator set will shut down.
- Troubleshooting
  - Fuel level check
    - Check the vehicle fuel level is above generator set fuel minimum level.
    - Most vehicles will restrict generator set fuel usage well before the vehicle gauge indicates empty.
  - Low battery voltage (Page 117)
    - Check the generator set batteries for minimum battery voltage and state of charge.
    - Check the generator set battery voltage for minimum Cold Cranking Amps rating.
  - Service interval warning
    - Perform scheduled maintenance as necessary.
  - Contact your local dealer or distributor.

Fault Code 6: Low Oil Level

© 2024 Cummins Inc.

- Reason
  - Low oil level has been detected by the oil level switch.
- Effect
  - The generator set will shut down.
- Troubleshooting
  - Service interval warning (Page 83)
    - Perform scheduled maintenance as necessary.
  - Contact your local dealer or distributor.

Fault Code 12: Output Over Voltage

- Reason
  - Generator set output voltage is above protection limit.
- Effect
  - The generator set will shut down.
- Troubleshooting
  - Contact your local dealer or distributor.

Fault Code 13: Output Under Voltage

- Reason
  - Generator set output voltage is below protection limit.
- Effect
  - The generator set will shut down.
- Troubleshooting
  - Contact your local dealer or distributor.

Fault Code 14: Output Over Frequency

- Reason
  - Generator set output frequency is over protection limit.
- Effect
  - The generator set will shut down.
- Troubleshooting
  - Contact your local dealer or distributor.

Fault Code 15: Output Under Frequency

- Reason
  - Generator set output frequency is under protection limit.
- Effect
  - The generator set will shut down.
- Troubleshooting
  - Contact your local dealer or distributor.

Fault Code 19: Actuator Circuit Fault

- Reason
  - A short circuit has been detected in the throttle actuator circuit.
- Effect
  - The generator set will shut down.
- Troubleshooting
  - Contact your local dealer or distributor.

Fault Code 25: Alternator Over Voltage

- Reason
  - Permanent Magnet Alternator (PMA) output voltage is out of range high.
- Effect
  - The generator set will shut down.
- Troubleshooting
  - Contact your local dealer or distributor.

Fault Code 26: Alternator Under Voltage

- Reason
  - Permanent Magnet Alternator (PMA) output voltage is out of range low.
- Effect
  - The generator set will shut down.
- Troubleshooting
  - Pin push back at PMA connector
    - Inspect 3 pin connector at the hot/cold wall (J7) that connects the PMA to the inverter, mis-aligned or pushed back pins can cause this shutdown
  - Fuel level check
    - Check the vehicle fuel level is above generator set fuel minimum level.
    - Most vehicles will restrict generator set fuel usage well before the vehicle gauge indicates empty.
  - Operating conditions are extreme (Page 59)
    - Take note of the generator set operating range.
    - Reduce generator set load.
  - Service interval warning
    - Perform scheduled maintenance as necessary.
  - Blocked cooling air flow (Page 75)
    - Check the generator set intake vents for blockages or debris.
    - Check the generator set exhaust ventilation area for clear space to vent hot air away from the generator set.
  - Contact your local dealer or distributor.

Fault Code 27: PMA Sense Lost

- Reason
  - No permanent magnet alternator rotation detected between the crank position sensor signal pulses.
- Effect
  - The generator set will shut down.
- Troubleshooting
  - Contact your local dealer or distributor.

Fault Code 29: Battery Over Voltage

- Reason
  - Battery voltage is above the Inverter/Controller protection limit.
- Effect
  - The generator set will shut down.

© 2024 Cummins Inc.

- Troubleshooting
  - High battery voltage
    - Check the generator set batteries for correct voltage specifications.
    - Check the generator set batteries for correct wiring configuration.
  - Contact your local dealer or distributor.

Fault Code 31: Engine Over Speed

- Reason
  - Engine speed is above the protection limit.
- Effect
  - The generator set will shut down.
- Troubleshooting
  - Excessive load at startup (Page 60)
    - Reduce generator set load at startup.
  - Contact your local dealer or distributor.

Fault Code 32: Crank Under Speed

- Reason
  - RPM does not reach minimum cranking speed.
- Effect
  - The generator set will shut down.
- Troubleshooting
  - Low battery voltage (Page 117)
    - Check the generator set batteries for minimum battery voltage and state of charge.
    - Check the generator set battery voltage for minimum Cold Cranking Amps rating.
  - Contact your local dealer or distributor.

Fault Code 34: High Inverter Temperature

- Reason
  - Inverter switch temperature is above protection limit.
- Effect
  - The generator set will shut down.
- Troubleshooting
  - Operating conditions are extreme (Page 59)
    - Take note of the generator set operating range.
    - Reduce generator set load.
  - Blocked cooling air flow (Page 75)
    - Check the generator set intake vents for blockages or debris.
    - Check the generator set exhaust ventilation area for clear space to vent hot air away from the generator set.
  - Service interval warning
    - Perform scheduled maintenance as necessary.
  - Contact your local dealer or distributor.

Fault Code 35: EE Checksum Fault

- Reason
  - Errors detected within inverter/controller at startup.

- Effect
  - The generator set will shut down.
- Troubleshooting
  - Contact your local dealer or distributor.

Fault Code 36: Mechanical Fault

- Reason
  - Generator set shut down without inverter/controller command.
- Effect
  - The generator set will shut down.
- Troubleshooting
  - Fuel level check
    - Check the vehicle fuel level is above generator set fuel minimum level.
    - Most vehicles will restrict generator set fuel usage well before the vehicle gauge indicates empty.
  - Operating conditions are extreme (Page 59)
    - Take note of the generator set operating range.
    - Reduce generator set load.
  - Service interval warning
    - Perform scheduled maintenance as necessary.
  - Blocked cooling air flow (Page 75)
    - Check the generator set intake vents for blockages or debris.
    - Check the generator set exhaust ventilation area for clear space to vent hot air away from the generator set.
  - Contact your local dealer or distributor.

Fault Code 38: Output Over Load

- Reason
  - Virtual breaker
  - Load current is above the generator set protection limit.
- Effect
  - The generator set will shut down.
- Troubleshooting
  - Generator load check (Page 61)
    - Take note of the generator set rated output.
    - Reduce generator set load.
  - Contact your local dealer or distributor.

Fault Code 43: RAM Fault

- Reason
  - Errors detected within inverter/controller at startup.
- Effect
  - The generator set will shut down.
- Troubleshooting
  - Contact your local dealer or distributor.

Fault Code 45: Crank Position Sense Lost

© 2024 Cummins Inc.

- Reason
  - No crank position signal pulses detected during two consecutive full rotations.
- Effect
  - The generator set will shut down.
- Troubleshooting
  - Contact your local dealer or distributor.

Fault Code 49: Actuator Over Load

- Reason
  - No RPM increase after command to open throttle.
- Effect
  - The generator set will shut down.
- Troubleshooting
  - Service interval warning
    - Perform scheduled maintenance as necessary.
  - Contact your local dealer or distributor.

Fault Code 52: Injector/Lift Pump Circuit Fault

- Reason
  - Injector or lift pump circuit is open or shorted.
- Effect
  - The generator set will shut down.
- Troubleshooting
  - Contact your local dealer or distributor.

Fault Code 53: Oil Temperature Sensor Circuit Fault

- Reason
  - Oil temperature sensor circuit is open or shorted.
- Effect
  - The generator set will shut down.
- Troubleshooting
  - Contact your local dealer or distributor.

Fault Code 54: MAT Sensor Circuit Fault

- Reason
  - Manifold Air Temperature sensor circuit is open or shorted.
- Effect
  - The generator set will shut down.
- Troubleshooting
  - Contact your local dealer or distributor.

Fault Code 56: MAP Sensor Circuit Fault

- Reason
  - Manifold Absolute Pressure sensor circuit is open or shorted.
- Effect
  - The generator set will shut down.
- Troubleshooting
  - Contact your local dealer or distributor.

© 2024 Cummins Inc.

Fault Code 67: IGBT Over Current Fault

- Reason
  - Alternating current output circuit is shorted.
- Effect
  - The generator set will shut down.
- Troubleshooting
  - Contact your local dealer or distributor.

Fault Code 74: Unprogrammed Board

- Reason
  - Inverter/controller not programmed.
- Effect
  - The generator set will shut down.
- Troubleshooting
  - Contact your local dealer or distributor.

Fault Code 81: Alternator Stator Circuit Fault

- Reason
  - Permanent Magnet Alternator phase A or B is shorted to ground at startup.
- Effect
  - The generator set will shut down.
- Troubleshooting
  - Contact your local dealer or distributor.

Fault Code 82: Vent Pressure Sensor Circuit Fault

- Reason
  - Injection pump vent pressure sensor circuit open or shorted.
- Effect
  - The generator set will shut down.
- Troubleshooting
  - Contact your local dealer or distributor.

9.2 Generator Set - Troubleshooting Symptoms

General Information

Troubleshooting symptoms may be necessary if the generator set is failing to operate in a manner that does not cause a fault code to go active.

It is recommended to check for a fault code before continuing to troubleshoot a symptom. (Page 99)
The status indicator light on the control switch will flash to indicate the fault code. (Page 54)

Overview

Customer panel inoperative

© 2024 Cummins Inc.

- Troubleshooting
  - Low battery voltage
    - Check the generator set batteries for minimum battery voltage and state of charge.
  - Contact your local dealer or distributor.

Engine consumes oil

- Troubleshooting
  - Service interval warning
    - Perform scheduled maintenance as necessary.
  - Contact your local dealer or distributor.

Engine cranks but does not start

- Troubleshooting
  - Inadequate cranking time (Page 60)
    - Allow generator to crank fully until Fault Code 4: Over Crank goes active
  - Contact your local dealer or distributor.

Engine does not crank

- Troubleshooting
  - Low battery voltage
    - Check the generator set batteries for minimum battery voltage and state of charge.
  - Contact your local dealer or distributor.

Engine hunts or surges

- Troubleshooting
  - Fuel level check
    - Check the vehicle fuel level is above generator set fuel minimum level.
    - Most vehicles will restrict generator set fuel usage well before the vehicle gauge indicates empty.
  - Service interval warning
    - Perform scheduled maintenance as necessary.
  - Contact your local dealer or distributor.

Engine power too low

- Troubleshooting
  - Operating conditions are extreme (Page 59)
    - Take note of the generator set operating range.
    - Reduce generator set load.
  - Blocked cooling air flow
    - Check the generator set intake vents for blockages or debris.
    - Check the generator set exhaust ventilation area for clear space to vent hot air away from the generator set.
  - Service interval warning
    - Perform scheduled maintenance as necessary.
  - Contact your local dealer or distributor.

Engine runs rough, lean, hard, sputters

- Troubleshooting
  - Service interval warning
    - Perform scheduled maintenance as necessary.
  - Contact your local dealer or distributor.

Exhaust smoke is black

- Troubleshooting
  - Service interval warning
    - Perform scheduled maintenance as necessary.
  - Contact your local dealer or distributor.

Exhaust smoke is blue

- Troubleshooting
  - Service interval warning
    - Perform scheduled maintenance as necessary.
  - Contact your local dealer or distributor.

Fuel pump runs continuously

- Troubleshooting
  - Auto generator start is enabled (Page 59)
    - Disable auto generator start mode to avoid unexpected or unwanted start, prime, and stop signals.
  - Contact your local dealer or distributor.

Generator set cranks without command

- Troubleshooting
  - Auto generator start is enabled (Page 59)
    - Disable auto generator start mode to avoid unexpected or unwanted start, prime, and stop signals.
  - Contact your local dealer or distributor.

Generator set does not charge batteries

- Troubleshooting
  - Generator load check
    - Reduce generator set load.
  - Customer battery charging system malfunctioning
    - The generator set does not charge vehicle batteries directly, but provides power to a separate battery charging component.
    - Check the battery charger for proper operation by following the manufacturers troubleshooting instructions.
  - Contact your local dealer or distributor.

Generator set does not produce power

© 2024 Cummins Inc.

- Troubleshooting
  - Customer circuit breaker is tripped
    - Check the vehicle circuit breaker panel for tripped circuit breakers.
  - Generator set circuit breaker is tripped (Page 54)
    - Check the generator set operator panel for a tripped circuit breaker.
  - Customer transfer switch is malfunctioning
    - The generator set is connected to the vehicle through an automatic transfer switch that selects between shore power and generator set power.
    - Check the transfer switch for proper operation by following the manufacturers troubleshooting instructions.
  - Contact your local dealer or distributor.

Generator set does not stop when stop switch is pressed

- Troubleshooting
  - Auto generator start is enabled
    - Disable auto generator start mode to avoid unexpected or unwanted start, prime, and stop signals.
  - Contact your local dealer or distributor.

Generator set is noisy

- Troubleshooting
  - Customer mounting system is malfunctioning
    - Check the vehicle mounting system for properly secured brackets and vibration isolators, if equipped.
  - Contact your local dealer or distributor.

Generator set is unresponsive

- Troubleshooting
  - Low battery voltage
    - Check the generator set batteries for minimum battery voltage and state of charge.
  - Contact your local dealer or distributor.

Generator set overheats

- Troubleshooting
  - Operating conditions are extreme (Page 59)
    - Take note of the generator set operating range.
    - Reduce generator set load.
  - Blocked cooling air flow (Page 75)
    - Check the generator set intake vents for blockages or debris.
    - Check the generator set exhaust ventilation area for clear space to vent hot air away from the generator set.
  - Service interval warning
    - Perform scheduled maintenance as necessary.
  - Contact your local dealer or distributor.

Generator set shuts down when loads are applied

- Troubleshooting
  - Generator load check (Page 61)
    - Take note of the generator set rated output.
    - Reduce generator set load.
    - If fault code 26 see troubleshooting section for fault code 26 alternator under voltage
    - If fault code 38 reduce load below 2.8kW (reduce to below and then increase to 2.8kW load)
  - Fuel level check
    - Check the vehicle fuel level is above generator set fuel minimum level.
    - Most vehicles will restrict generator set fuel usage well before the vehicle gauge indicates empty.
  - Contact your local dealer or distributor.

Generator set shuts down, no fault code

- Troubleshooting
  - Fuel level check
    - Check the vehicle fuel level is above generator set fuel minimum level.
    - Most vehicles will restrict generator set fuel usage well before the vehicle gauge indicates empty.
  - Fault code not displayed on remote panel
    - The remote operator panel is not properly displaying the Fault Code.
    - Use the generator set operator panel to read the fault code.
  - Contact your local dealer or distributor.

Generator set starts and runs, then stops, will restart immediately or after cool down

- Troubleshooting
  - Auto generator start is enabled
    - Disable auto generator start mode to avoid unexpected or unwanted start, prime, and stop signals.
  - Fuel level check
    - Check the vehicle fuel level is above generator set fuel minimum level.
    - Most vehicles will restrict generator set fuel usage well before the vehicle gauge indicates empty.
  - Blocked cooling air flow (Page 75)
    - Check the generator set intake vents for blockages or debris.
    - Check the generator set exhaust ventilation area for clear space to vent hot air away from the generator set.
  - Contact your local dealer or distributor.

Generator set starts but stops when start switch is released

- Troubleshooting
  - Inadequate cranking time
    - Allow generator to crank fully until Fault Code 4: Over Crank goes active
  - Contact your local dealer or distributor.

Starter engages but disengages quickly

- Troubleshooting
  - Contact your local dealer or distributor.

© 2024 Cummins Inc.

Chapter 10 - Storage Practices

Contents

10.1 Generator Set 113

 © 2024 Cummins Inc.

This Page Left Intentionally Blank

10.1 Generator Set - Long Term Storage

General Information

Proper storage is essential for preserving top generator set performance and reliability.

If the generator set is not going to be exercised on a regular basis and not be used for more than 120 days, it should be prepared for storage.

How To

If the generator set is a gasoline model, perform the following steps.

- Fill the fuel tank with fresh fuel and add a fuel preservative.
- Run the generator set for about 30 minutes plus 2 minutes per 0.3 m [12 in] of fuel line at approximately 1/2 rated power to fill the fuel lines with fresh fuel and preservative.
- Change the engine oil.
  - Attach a tag indicating the oil grade viscosity.
- Disconnect all appliances.
- Disconnect the battery cables, negative (–) cable first, from the starting battery.
- Remove and store the battery according to the battery manufacturer's recommendations.
- Cap the exhaust tail pipe and cover the intake and exhaust ports to keep out dirt, moisture, rodents, and other foreign materials.
- Close the fuel supply valve, if equipped.
- Set the circuit breaker to the OFF position.

If the generator set is an LPG model, check the local ordinances if the vehicle is going to be garaged.

Generally, ordinances require that the LPG system be the following.

- Leak free
- The LPG container is not be filled beyond specified limits
- The container shutoff valve is closed
- The vehicle is not located near sources of heat or ignition

© 2024 Cummins Inc.

Chapter 11 - Specifications

Contents

11.1 Generator Set 117

 © 2024 Cummins Inc.

This Page Left Intentionally Blank

11.1 Generator Set - Specifications

Specifications

All models

- Operating range (Page 59)
- Generator set weight
  - 49.8 kg (110 lb)
- Generator set size
  - Length
    - 560 mm [22 in]
  - Width
    - 430 mm [16.9 in]
  - Height
    - 340 mm [13.4 in]
- Generator set sound
  - No load at 3.05 m (10 ft)
    - 64 dB(A)
  - Half load at 3.05 m (10 ft)
    - 65 dB(A)
- Generator set starting battery
  - 650 CCA minimum
  - 12 Volts
- Certifications
  - ANSI / RVIA EGS-1, 2018
  - CSA C22.2 No. 100-14
  - USDA FFS No. 5100-1A / SAE J350
  - Meets National Park Service sound level requirements (60 dB(A) at 15.24 m (50 ft)) for use in national parks.

Gasoline models

- Electrical specifications
  - Output frequency
    - 60 Hz
  - Rated output power
    - 2800 Watts
  - Output voltage
    - 120 V
  - Output current
    - 23.3 A
  - Phases
    - 1
  - Circuit breaker rating
    - 30 A

© 2024 Cummins Inc.

- Engine specifications
  - Fuel
    - Not more than 10% ethanol blend
    - Not more than 5% methanol and must contain solvents and corrosion inhibitors
  - Average fuel consumption
    - No load: 0.14 Gal/h (0.53 L/h)
    - Half load: 0.21 Gal/h (0.79 L/h)
    - Full load: 0.46 Gal/h (1.74 L/h)
  - The maximum fuel pump lift is 914 mm [36 in].
  - Lubricating Oil Capacity (Page 84)
  - Design
    - 4 cycle, single cylinder, Overhead valves
    - Aluminum alloy crankcase cover, cylinder head, and crankcase, with iron cylinder liner
    - Pressurized air cooling
    - Computer controlled ignition system
    - 3-wire, negative ground, 12 V starting system
    - Splash lubrication system
  - Displacement
    - 252 cubic cm (15.4 cubic in)
  - Compression Ratio
    - 8.8:1
  - RPM
    - 2445-2900 RPM
  - Power
    - 7.1 bhp (max) at 3600 RPM

Liquid Propane models

- Electrical specifications
  - Output frequency
    - 60 Hz
  - Rated output power
    - 2500 Watts
  - Output voltage
    - 120 V
  - Output current
    - 20.8 A
  - Phases
    - 1
  - Circuit breaker rating
    - 30 A

© 2024 Cummins Inc.

- Engine specifications
  - Fuel
    - Supply pressure: 9-13 inWC (2.25-3.25 kPa) 0.33-0.5 psi
    - HD-5 grade
    - No more than 2.5% butane when operating in low ambient temperatures
  - Average fuel consumption
    - No load: 0.18 Gal/h (0.77 lb/h) 0.35 kg/h
    - Half load: 0.31 Gal/h (1.27 lb/h) 0.59 kg/h
    - Full load: 0.56 Gal/h (2.31 lb/h) 1.05 kg/h
  - Lubricating Oil Capacity (Page 84)
  - Design
    - 4 cycle, single cylinder, Overhead valves
    - Aluminum alloy crankcase cover, cylinder head, and crankcase, with iron cylinder liner
    - Pressurized air cooling
    - Computer controlled ignition system
    - 3-wire, negative ground, 12 V starting system
    - Splash lubrication system
  - Displacement
    - 252 cubic cm (15.4 cubic in)
  - Compression Ratio
    - 8.8:1
  - RPM
    - 2445-2900 RPM
  - Power
    - 7.1 bhp (max) at 3600 RPM

© 2024 Cummins Inc.

Torques

Ignition Coil - Remove and Install - Page 88

Ignition coil capscrews	
Metric	**U.S.**
3 N·m	27 in-lb

Lubricating Oil - Drain and Fill - Page 83

Oil drain plug	
Metric	**U.S.**
20 N·m	177 in-lb

Spark Plugs - Remove and Install - Page 90

Spark Plug	
Metric	**U.S.**
27 N·m	239 in-lb

 © 2024 Cummins Inc.

This Page Left Intentionally Blank

Index

About the Service Information-Owner - Overview 7
Additional Service Literature - Overview 37
Air Filter Element - Remove and Install 78
Automatic Mode - Normal Start 59
Batteries - Overview 24
Battery Cables and Connections - Remove and Install 24
Circuit Breaker - Reset 69
Crankcase Breather Hose - Remove and Install 76
Dataplates - Overview 44
Door - Remove and Install 67
Engine - Break-In 70
Equipment - Safe Service 26
Fuel Filter - Gasoline Electronic Fuel Injection - Remove and Install 93
Fuel System - Prime 71
General Cleaning-Generator Set - Overview 31
General Safety -Generator Set RV - Overview 11
Generator Set - Cold Weather Start 61
Generator Set - Daily Check 75
Generator Set - Exercise 66
Generator Set - Inspect 75
Generator Set - Loading 61
Generator Set - Long Term Storage 113
Generator Set - Normal Start 60
Generator Set - One Time Only 75
Generator Set - Operating Range 59
Generator Set - Overview 49
Generator Set - Routine Maintenance 75
Generator Set - Shutdown 61
Generator Set - Specifications 117
Generator Set - Troubleshooting Fault Codes 99
Generator Set - Troubleshooting Symptoms 105
Ignition Coil - Remove and Install 88
Illustrations - Overview 7
Lubricating Oil - Drain and Fill 83
Lubricating Oil - Level Check 81
Lubricating Oil Dipstick - Remove and Install 86
Manual Mode - Normal Start 59
Manufacturing Locations - Overview 39
Model Identification-Generator Set - Overview 43
Operator Interface - Overview 54
Remote Control Panel - Overview 55
Safety Messages - Overview 24
Service Assistance - Overview 38
Spark Plugs - Inspect 92
Spark Plugs - Remove and Install 90

 © 2024 Cummins Inc.

This Page Left Intentionally Blank

Cummins Inc.
Box 3005
Columbus, Indiana, U.S.A., 47202

www.cummins.com
© 2024 Cummins Inc.

A075S349 (Issue 3)
04-Jan-2024