Atwood® PROTECHTOR
PROFESSIONAL•HIGH-TECH•GAS DETECTORS™

LP & CO Gas Detector



User's Manual Model: LPCO

INTERTEK ETL LISTED C US

Tested to: UL2034, UL 1484 & CSA 6.19

Atwood®

Read Entire Manual Before Using This Detector

Liquefied Petroleum (LP or Propane) and Carbon Monoxide (CO) gases can cause hazardous conditions when found in high concentrations. Both gases are known to be found in recreational vehicles and the proper detection of these gases provides a safe environment for the occupants of the vehicle.

CAUTION

This alarm will only indicate the presence of gas at the sensor. Gases may be present in other areas. Read this entire manual before using this detector.

⚠ WARNING

This product is intended for use in ordinary indoor locations of family living units. It is not designed to measure compliance with Occupational Safety and Health Administration (OSHA) commercial or industrial standards.

This detector has not been designed to detect smoke, fire, or gases other than LP and CO.

Table of Contents

Carbon Monoxide Awareness ..... 4 – 5

Liquefied Petroleum Awareness 5

Operating Conditions 6

Detector Operation ..... 7 – 8

Power Off Mode 7

Normal Gas Detection Mode 7

Alarm Active Mode 7

Alarm Test Mode 8

Alarm Reset/Stabilization Mode 8

Fault Mode 8

Visual Indicator Functions 9

Audible Indicator Functions 9

Active Alarm Procedures 10

Testing 11

Installation ..... 12 – 14

Power 12

Location 12

Mounting ..... 13 – 14

Maintenance 15

Troubleshooting Quick-Guide ..... 16 – 17

Carbon Monoxide Awareness

The following are the symptoms of Carbon Monoxide poisoning and must be discussed with all occupants of the vehicle.

1) **Mild Exposure:** Slight headache, nausea, vomiting, fatigue ("Flu-like" symptoms).
2) **Medium Exposure:** Severe throbbing headache, drowsiness, confusion, fast heart rate.
3) **Extreme Exposure:** Unconsciousness, convulsions, heart and lung failure, brain damage, and death.

Many cases of reported CARBON MONOXIDE POISONING indicate that while victims are aware they are not well, they become so disoriented they are unable to save themselves by either exiting the building or calling for assistance. Young children and household pets are typically the first affected.

This device does not provide warnings for all levels of CO. Individuals with certain medical conditions may consider using a warning device that provides both audible and visual signals for carbon monoxide concentrations below 30 ppm.

If you experience ANY symptoms of CO poisoning, consult your physician.

Be aware that the following conditions can result in transient CO situations, such as:

1) Excessive spillage or reverse venting of fuel burning appliances caused by:
   - Outdoor ambient conditions such as wind direction and/or velocity, including high gusts of wind; heavy air in the vent pipes (cold/humid air with extended

periods between cycles).

- Negative pressure differential resulting from the use of exhaust fans.
- Simultaneous operation of several fuel burning appliances competing for limited internal air.
- Vent pipe connection vibrating loose from clothes dryers, furnaces, or water heaters.
- Obstructions in or unconventional vent pipe designs which amplify the above situations.

2) Extended operation of unvented fuel-burning devices (range, oven, fireplace, etc.).

3) Temperature inversions which can trap exhaust gasses near the ground.

4) Car idling in an open or closed attached garage, or near a home.

Liquefied Petroleum Gas Awareness

LP gas is commonly called Propane and is sold commercially as a suitable fuel in portable and permanent heating and cooking appliances.

It is important to detect LP gas due to its explosiveness at concentrated volumes. The lowest explosive limit for LP concentration is 21,000 parts per million (ppm). This detector was designed to alarm at 10% of this limit or 2,100 ppm.

An important property of LP gas is that it is denser than air. This property causes LP gas to accumulate close to the floor in non-turbulent atmospheres. This is important to remember when choosing a location for your detector.

Operating Conditions

Supply Voltage Thresholds:	9 to 18 VDC (13.5V nominal)
Supply Current (Max):	75 mA
Supply Current (Typical):	40 mA
Temperature:	-40 to 70 °C (-40 to 158 °F)
Humidity:	15 to 90 %
LP Detection Threshold:	2100 ppm for 10 seconds
CO Detection Thresholds:	70 ppm for 60 to 240 minutes 150 ppm for 10 to 50 minutes 400 ppm for 4 to 15 minutes
Audible Indicator:	85 dB at 10 feet (Minimum)
Detector Lifetime:	7 years (powered operation)
Standards:	ETL Tested to UL1484 and UL2034 Residential and RV Complies with CSA 6.19.01

Detector Operation

The detector includes four LED indicators, an audible alarm, and one Test/Reset button that provide interaction and feedback with your detector. The indicators allow you to troubleshoot your detector and to determine the proper actions to take. The visual indicators are labeled Power, Fault, Carbon Monoxide, and Propane.

The detector operates in six separate modes that will be identified in this section.

Power Off Mode

This mode indicates that there is insufficient power provided to the detector. The indicators and button will not function in this mode. Sufficient power must be provided to the detector to exit this mode.

Normal Gas Detection Mode

This mode indicates that gas concentrations are continuously monitored. It also indicates that gas concentrations are at safe levels. In this mode the Power indicator will be lit, and all other indicators will not be active. The Test function of the Test/Reset button will be active.

Alarm Active Mode

This mode indicates that one or more gas concentrations have achieved unsafe levels. In this mode the Power indicator will be lit. In the case that the CO concentration is unsafe the Carbon Monoxide indicator will be lit. In the case that the LP concentration is unsafe the Propane indicator will be lit. In this mode the audible indicator will signal an alarm, and the Reset function of the Test/Reset button will be active. This mode will be exited automatically if the CO concentration falls to a safe level for an extended period of time and LP concentrations fall below 500 ppm for greater than 10 seconds.

Alarm Test Mode

This mode indicates that the Test function of the Test/Reset button was initiated. In this mode, all visual indicators will be lit, and the audible indicator will signal an alarm. The Test/Reset button will not function during this mode. This mode will be exited automatically within 10 seconds.

Alarm Reset/Stabilization Mode

This mode indicates that the alarm is stabilizing for the first 3 minutes after power-up or the first 6 minutes after the Reset function was initiated. In this mode the Power indicator will be lit, and the reset alarm's indicator will be flashing. The other visual indicators, the audible indicator, and the Test/Reset button function will be off. This mode will be exited if the previously inactive alarm is triggered. If gas concentrations are still high after the 6 minutes, the previous alarm will reactivate.

Fault Mode

This mode indicates that a fault has been detected that compromises some detector function. If a fault is detected on only one of the sensors, the other sensor should function normally. The table below lists the indicator actions and the corresponding detector status. This mode will be exited automatically when the fault is cleared.

If the fault persists, the detector is not functioning properly and must be replaced to ensure your safety in the area.

Functions

Feature	Function	Status
Power LED	Flashing	Power supply fault
	On	Power supply OK
Propane LED	Flashing	Propane alarm disabled
	Off	Propane alarm OK
Carbon Monoxide LED	Flashing	Carbon Monoxide alarm disabled
	Off	Carbon Monoxide alarm OK
Fault LED	On	Fault active
Audible Indicator	Chirp	Fault Active
	4 Beeps	Alarm Active

Figure 1: Fault Indicator Actions

The visual indicators have two distinct functions: On and Flashing.

The “On” function is indicated by constant solid brightness of the LED. The “Flashing” function is indicated by the LED blinking once every second.

The audible indicator has two distinct functions: Alarm and Fault.

In the “Alarm” function, the alarm will sound four “beeps” in 1 second followed by 5 seconds of silence. After 4 minutes of alarming, each silence will last for 1 minute. In the “Fault” function, the alarm will sound a “chirp” once every 40 seconds until the fault is cleared.

Active Alarm Procedures

⚠ WARNING

Actuation of your CO alarm indicates the presence of carbon monoxide (CO) which can KILL YOU.

If alarm signal sounds:

1) Press the Test/Reset button;

2) Call your Local Emergency Services number or 911.

_____

Fill in your local Fire Department number here.

3) Immediately move to fresh air – outdoors or by an open door/window. Do a head count to check that all persons are accounted for. Do not reenter the premises nor move away from the open door/window until the emergency services responders arrive, the premises have been aired out, and your alarm returns to its normal condition.

4) After following steps 1 – 3, if your alarm reactivates within a 24 hour period, repeat steps 1 – 3 and call a qualified appliance technician

(_____)

to investigate for sources of CO and LP from fuel burning equipment and

appliances, and inspect for proper operation of this equipment. If problems are identified during this inspection, have equipment serviced immediately. Note any combustion equipment not inspected by technician and consult the manufacturers' instructions, or contact the manufacturers directly, for more information about CO and LP safety and this equipment. Make sure that motor vehicles are not, and have not been, operating in an enclosed area or in close proximity.

Note: Two self adhesive emergency contact labels are provided. The user must add telephone numbers for the local emergency service provider and for a qualified service technician. User must place one label next to the alarm. The other label must be placed near a source of fresh air where you plan to gather in the event the alarm indicates carbon monoxide presence.

Testing

⚠WARNING

Test Alarm operation after vehicle has been in storage, before each trip, and at least once per week during use.

Note: Unit must be powered for three minutes before test can be performed.

The Test/Reset button is used to verify proper detector operation. Executing the test function sounds the alarm and lights up all LEDs. The test will sound the alarm twice, with 4 "beeps" in 1 second followed by 5 seconds of silence.
By pressing the button, you can verify that the alarm sounds and that all visual indicators function properly. The detector is internally monitored while powered to ensure proper operation and to detect faults.

Installation

Power

The detector must be wired into the vehicle 12 VDC system and directly connected to the house battery through an appropriate fuse. A second power wire allows a connection to an auxiliary 12 VDC battery for additional protection.

Location — DO

Install the detector in the vicinity of potential gas leaks. These locations may include the cook top, oven, refrigerator, or furnace.

Install near sleeping areas.

Install the detector no more than 18” (46cm) off the floor. LP gas is heavier than air and settles to the floor.

Install in area where detector vents are unobstructed to airflow; away from furniture, curtains, and out of closets.

Location — DO NOT

Do not install near exterior doors, exterior opening windows, vents, fans, or other drafty areas.

Do not install on an outside wall.

Do not install in an area that is excessively dusty, dirty, greasy, or susceptible to chemical spray. Dirt, grease, and chemicals may affect the detector’s performance.

Mounting

Your LP/CO alarm will be mounted in the wall of your RV. Preparation for installation must be done prior to mounting.

1) Verify that at least 1 1/2" of free space behind the wall is available for the detector.

2) Cut out a square hole 3 7/16" by 3 9/16" where the detector will be placed.

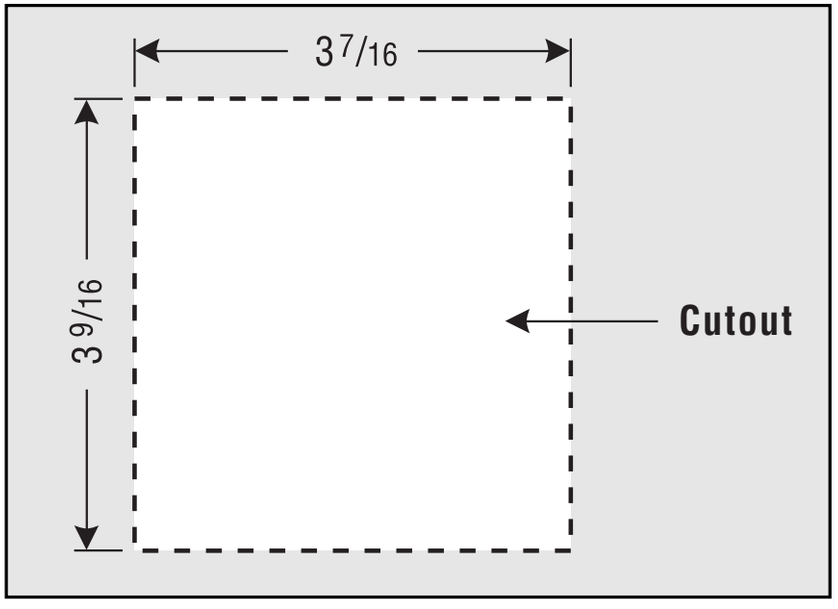

Figure 2: Installation Preparation

3) Disconnect the power supply to avoid shorting.

4) Route the power wires to the hole.

5) Use wire nuts to connect the wires of the detector to the corresponding wires of the vehicle. This detector comes with two red wires (for optional dual battery operation) and one black wire. Connect the black wire to ground.

Make sure connection is made to a properly fused circuit. A one amp fuse is recommended for single detectors and a three amp maximum fuse is allowed for multiple device installation.

Installation *(continued)*

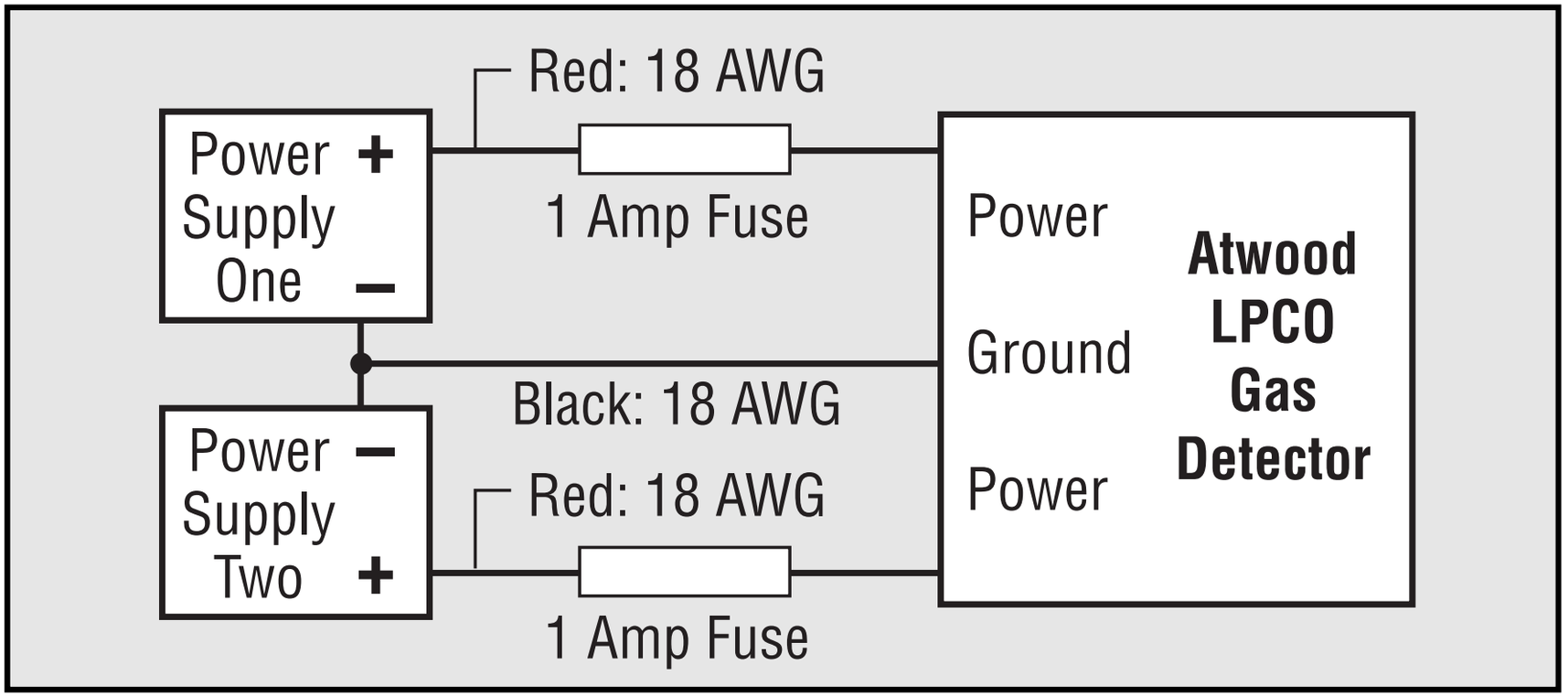

Figure 3: Wiring Diagram

6) Remove the bezel from the detector face.

7) Place the detector in the hole in the upright position, and secure with the screws provided.

8) Snap the bezel over the detector. See the detector assembly drawing in Figure 4.

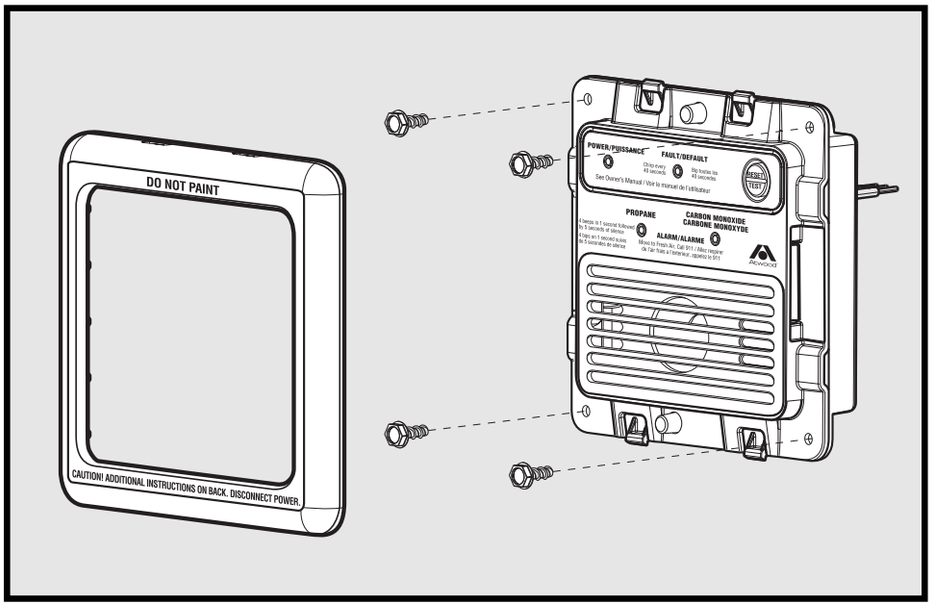

Figure 4: Detector Assembly

Maintenance

- Verify proper detector function by pressing the Test/Reset Button after storage, before every use and once per week during extended use.
- Vacuum the detector with a soft brush attachment to remove collected dirt and dust every month.
- Keep the detector away from chemical sprays and solvents which may compromise the detectors functions.
- Do not paint the detector. Paint may hinder the proper flow of air to the sensors.
- Keep the detector away from the following materials as they may damage the sensors, or falsify their readings:
  - Silicone adhesives including hair grooming materials
  - Corrosive liquids such as acids
  - Alkaline base metals, especially salt spray
  - Prolonged or excessive exposure to water (spray or condensation)
  - Excessive concentrations of Hydrogen

Troubleshooting Quick-Guide

Use this chart to determine in which mode the detector is executing. Match the detector to the state of the indicator on the left to narrow down the possible operating modes.

Power Visual Indicator	Detector Mode
OFF	Detector power supply voltage is too low to operate
FLASHING	Detector power supply voltage is too high or too low
ON	Detector power supply voltage is OK
Carbon Monoxide Visual Indicator	**Detector Mode**
OFF	**CO alarm is inactive:** • Power Off • Normal Gas Detection • Fault
FLASHING	**CO alarm is disabled:** • Alarm Reset/Stabilization • Fault Mode
ON	**CO alarm is activated:** • Alarm Active • Alarm Test

Propane Visual Indicator	Detector Mode
OFF	**LP alarm is inactive:** • Power Off • Normal Gas Detection • Fault
FLASHING	**LP alarm is disabled:** • Alarm Reset/Stabilization • Fault
ON	**LP alarm is activated:** • Alarm Active • Alarm Test
Fault Visual Indicator	**Detector Mode**
OFF	**No fault is detected:** • Power Off • Normal Gas Detection • Alarm Active • Alarm Reset/Stabilization
ON	**Fault has been detected:** • Alarm Test • Fault
Audible Indicator	**Detector Mode**
OFF	**No alarm is active and no fault is detected:** • Power Off • Normal Gas Detection • Alarm Reset/Stabilization
ALARM	**One or both alarms are active:** • Alarm Active • Alarm Test
FAULT	**Fault has been detected:** • Fault (chirp)

Warranty: *Atwood Mobile Products LLC warrants its gas detectors to be free from defects in materials and workmanship for a period of two years from the date of purchase. The "Original Purchaser" is that person who purchases a new gas detector for their own use, or that person who purchases for their own use a new recreational vehicle in which a new gas detector has been installed. If there is any defect in the manufacturing of, or failure of any such gas detector which is reported to Atwood within the aforesaid two year period, Atwood will, within a reasonable time and without charge, make repairs and replacements as needed. In no case shall Atwood liability under any other remedy prescribed by law exceed the purchase price. Your gas detector is not a substitute for Property, Disability, Life or other insurance coverage. Appropriate insurance is the owner's responsibility.*

Should problems or questions arise, contact your dealer, the camper RV manufacturer, or the Atwood Service Department at (866) 869-3118.

©2007 Atwood Mobile Products LLC November, 2007 MPD31298

Atwood®
Atwood Mobile Products
SALT LAKE CITY OPERATIONS
1874 South Pioneer Rd. • Salt Lake, UT 84104