connexx

HD LED TV

Model : CX28A19



Instruction Manual

Contents

Important Safety Instructions 1

About Your TV
- Specifications 3
- Includes 3

Setup
- Connecting the Stand 3
- Remote Batteries 3
- Mounting the TV on a wall 4

Orientation
- TV Controls & Inputs 5
- Remote 7

Main Menu Operation
- Setup Wizard 8
- Setup Menu 10
- Picture Menu 11
- Sound Menu 12
- Time Menu 13
- Lock Menu 14
- Channel Menu 15
- Media Menu 16

Trouble Shooting 19

Customer Support
- Warranty 20

Important Safety Instructions

Warnings and Precautions

To prevent any injuries, the following safety precautions should be observed in the installation, use, servicing and maintenance of this equipment.

Before operating this equipment, please read this manual completely, and keep it for future reference.



1) Read these instructions.

2) Keep these instructions.

3) Heed all warnings.

4) Follow all instructions.

5) Do not use this apparatus near water.

6) Do not clean with strong chemical agents

7) The appliance is intended for household use only, and not for commercial or industrial use.

8) Do not block any of the ventilation openings. Install in accordance with the manufacturer's instructions.

9) Do not install near any heat sources such as radiators, heat registers, stoves, or other apparatus (including amplifiers) that produce heat.

10) Care required with the use of this apparatus in tropical climates. Do not use the appliance under temperatures over 40°C.

11) Protect the power cord from being walked on or pinched particularly at plugs, convenience receptacles, and the point where they exit from the apparatus.

12) Only use the attachments/accessories specified by the manufacturer.

13) Use only with a stand, or bracket, specified by the manufacturer, or sold with the apparatus.

14) Unplug this apparatus during lightning storms or when unused for long periods of time.

15) Do not operate the unit if it is not working normally or has been damaged in anyway. Turn the unit off, unplug it from the power source and consult service personnel. Do not attempt to service this unit yourself.

16) Refer all servicing to qualified service personnel. Servicing is required when the apparatus has been damaged in any way, such as power supply cord or plug is damaged, liquid has been spilled or objects have fallen into the apparatus, the apparatus has been exposed to rain or moisture, does not operate normally, or has been dropped.

Important Safety Instructions

17) Do not listen to headphones at high volumes; the excessive sound pressure from earphones can cause hearing loss.
18) Keep the player clean and never store it next to a heat source or in dirty, humid or wet places. Keep it out of direct sunlight.
19) Press the Player's button gently. Pressing them or the screen too hard can damage the player.
20) Do not subject the product to harsh impacts. Do not drop the appliance. This may result in damage to the product.
Do not touch, push or rub the surface of the LCD screen with any sharp or hard objects.
When the surface of the LCD screen becomes dusty, wipe it gently with an absorbent cotton cloth or other soft material like chamois. Do not use acetone, toluene or alcohol to clean the surface of the screen. These chemicals will cause damage to the surface.
21) Please observe the local regulations regarding the disposal of packaging materials, exhausted batteries and old equipment.

WARNING: To reduce the risk of fire or electric shock, this apparatus shall not be exoposed to dripping or splashing and no objects filled with liquids, such as vases, shall be placed on the apparatus.

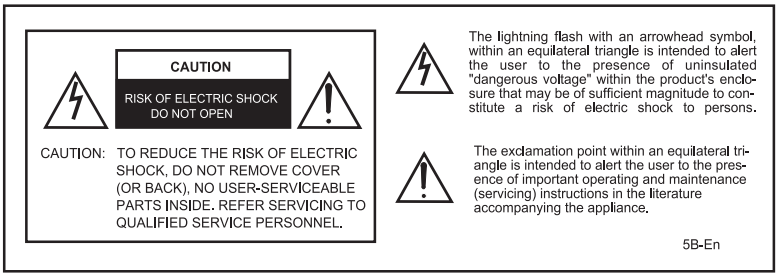

Apparatus with Class I construction shall be connected to a Mains socket outlet with a protective earthing connection.

WARNING

TO PREVENT DAMAGE WHICH MAY RESULT IN FIRE OR ELECTRIC SHOCK HAZARD, DO NOT EXPOSE THIS APPLIANCE TO RAIN OR MOISTURE.

Caution :

- These servicing instructions are for use by qualified service personnel only. To reduce the risk of electric shock, do not perform any servicing other than that contained in the operating instructions unless you are qualified to do so.

- Any changes or modifications not expressly approved by the party responsible for compliance could void the user's authority to operate the equipment.

About Your TV

Specifications

- Model: CX28A19
- Screen Size: 28”
- Panel Resolution: 1366*768
- Viewing Angle: 178(H)*178(V)
- Aspect Ratio: 16:9
- USB Port: Supports JPEG image/MP3 audio/ MPEG1, 2 & 4 video files

Includes

- Remote control and 2 AAA batteries
- Base stand
- Instruction Manual

Setup

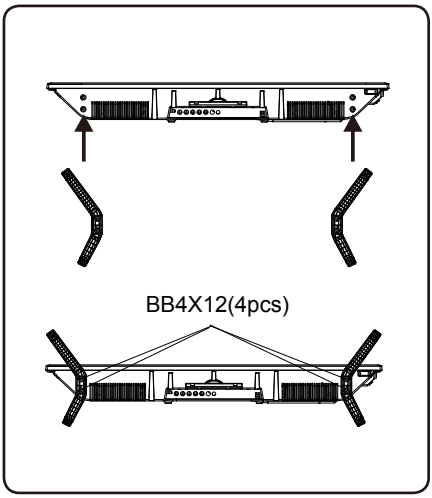

Connecting the Stand

When placing TV on flat surface, be careful not to push, scratch, or otherwise damage the front of the TV and LCD screen. Using a phillips-head screwdriver, tighten the screws by hand. Using a power drill could damage the TV stand.

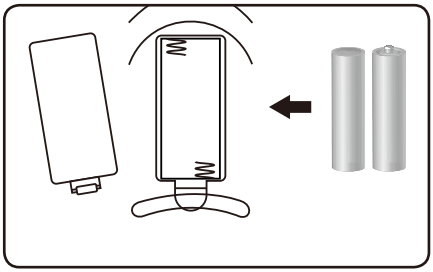

Remote Batteries

Requires 2, AAA-size batteries (included)

Mounting the TV on a wall

If you mount this TV on the wall, follow the instructions exactly as set out by the manufacturer. Incomplete or improper installation may cause injury to you, and/or damage to the LED TV. When you have appropriate wall mount brackets, please install them by using the VESA screws included in TV PE bag.

Install Steps

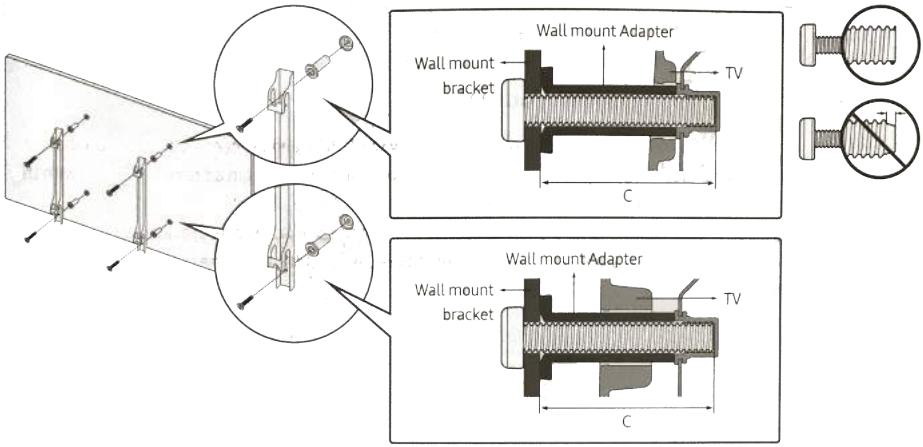

1.Assemble the wall mount adapter.
2.Install the wall mount adapter on a wall with screws.
3.Install the wall mount brackets onto rear cabinet with the VESA screws.
4.Buckle the brackets with TV into the wall mount adapter.

Please refer to the table below to ensure the correct size VESA mount is used with the TV.

TV size in inches	VESA screw hole specs		Screw Size	Quantity
	Width mm	Height mm		
19-28	100	100	M4	4
32	200	100	M6	4
39-43	200	200	M6	4
49-55	200	200	M8	4
65-75	400	400	M8	4

Orientation

TV Controls

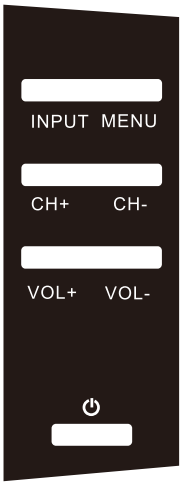

INPUT Press to select the input source

MENU Press to enter the main menu

VOL+ Press to increase the volume

VOL- Press to decrease the volume

CH+ Press to skip to the next channel

CH- Press to skip to the previous channel

⏻ Press to switch the TV on/off

Orientation

Inputs





Audio Out: Connects to the AUDIO IN ports of an audio device.

Headphone Jack: Headphone output jack.

Optical Out: Connects to the Optical Audio in port of an audio device.

Audio Input Jack: Connects to the COMPOSITE AUDIO OUT ports of an audio device.

Video Input Jack: Connects to the COMPOSITE VIDEO OUT ports of an audio device.

Y/Pb/Pr: Connect to the COMPONENT VIDEO OUT ports of an audio device.

HDMI 1 Input(ARC) Jack: HDMI in

HDMI 2 Input Jack: HDMI in

HDMI 3 Input Jack: HDMI in.

VGA Input Jack: Connects to the VGA output jack on a personal computer.

PC Audio Input Jack: Connects to the Audio out jack of a computer.

RF Input Jack: Connects to the ANTENNA, CABLE, or CABLE BOX.

USB: USB Port for media playback when Media is the TV's selected source.

Orientation

Remote

Remote Control

REMOTE CONTROL OUTLOOK & FUNCTION KEY DEFINITION

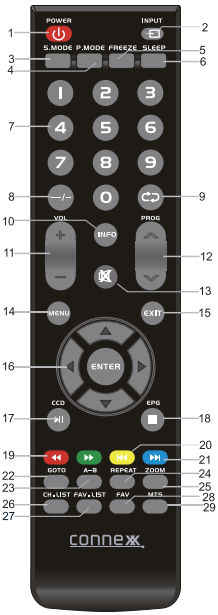

1. 【**POWER**】Press this button to switch to standby mode, and press it again to turn TV on.
2. 【**INPUT**】Press to select the input source.
3. 【**S.MODE**】This button is used to select the sound mode.
4. 【**P.MODE**】This button is used to adjust user picture mode, press this button repeatedly and select one of four settings.
5. 【**FREEZE**】Static picture.
6. 【**SLEEP**】Let you select amount of time before your TV turn itself off automatically.
7. 【**0-9**】Press 0-9 to select a TV channel directly when you are watching TV. To enter page number in teletext mode and so on.
8. 【**--/-**】Press this button to enter a program number with different digits.e.g.-for1,--for11,---for111.
9. 【 ⊂⊃ 】To swap to the previous program from current program.
10. 【**INFO**】The button is used to display current channel information.
11. 【**VOL+/-**】Press to increase / decrease the sound level.
12. 【**PROG+/-**】Press to scan through or to select a channel.
13. 【**MUTE**】Press this button to shut off sound of the TV temporarily, press again to restore TV sound.
14. 【**MENU**】Brings up the LED main menu to the screen in TV mode.
15. 【**EXIT**】Press EXIT to exit menu or sub menu.
16. 【**▲/▼/◀/▶/ENTER**】Allows you to navigate the on-screen menus and adjust the system settings to your preference.
17. 【**CCD**】Select closed caption mode. Press the key repeatedly to choose one of the modes among Off, CC1, CC2, CC3, CC4, Text1, Text2, Text3, Text4.
    【 ▶II 】Play/pause or begin to timeshift.
18. 【**EPG**】Press to show the Electronic Program Guide menu.
    【 ■ 】Stop playing or stop recording.
19. 【 ◀◀ 】During playback, press to select the previous track/chapter.
    【 ▶▶ 】During playback, press to select the next track/chapter.
20. 【 I◀◀ 】Switch to the previous display.
21. 【 ▶▶I 】Move to the next display.
22. 【**GOTO**】Jump to a specific time on a DVD/ VCD/MP3/WMA or CD.
23. 【**A-B**】Press to start the A-B repeat function.
24. 【**REPEAT**】Press to select repeat playback modes.
25. 【**ZOOM**】This button is used to set display window.
26. 【**CH. LIST**】Display program list.
27. 【**FAV.LIST**】Press to select the channel in FAV List.
28. 【 **FAV** 】Press to select the favorite channel.
29. 【**MTS**】Select MTS sound system.Press the key repeatedly to choose one of the modes among Mono,Stereo,Sap.

Loading batteries:

Remove the lid of the battery compartment;Insert 2 AAA size batteries with polarities as indicated inside the compartment; Replace the lid.

Main Menu Operation

Setup Wizard

Connect RF cable to your TV Aerial socket.

TV Location

Set the TV Mode to Home or Retail display use.

Press ◄ / ► button to select(Home / Store).

Press ▼ / ▲ button to select and press **ENTER/►** button to enter the sub-menu.



Note:

This page is only enable when you have Energy Star request.

Select Language

Press ◄ / ► button to select the language to be used for menus and message.

Press ▼ / ▲ button to select and press **ENTER/►** button to enter the sub-menu.



Main Menu Operation

Setup Wizard

Select Time

Press ▼ / ▲ button to select the time zone, daylight saving time and time format you want.
Press ◄ / ► button on the remote control to adjust.
Press ▼ / ▲ button on the remote control to select and press **ENTER/►** button to enter the sub-menu.

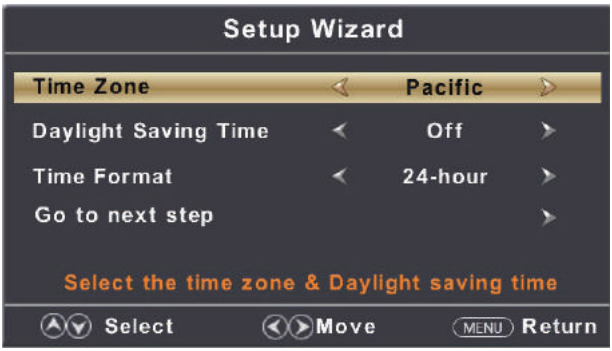

Auto Scan

Press ◄ / ► button to select the antenna type.
Press ▼ / ▲ button to select and press **ENTER/►** button to start auto scan.

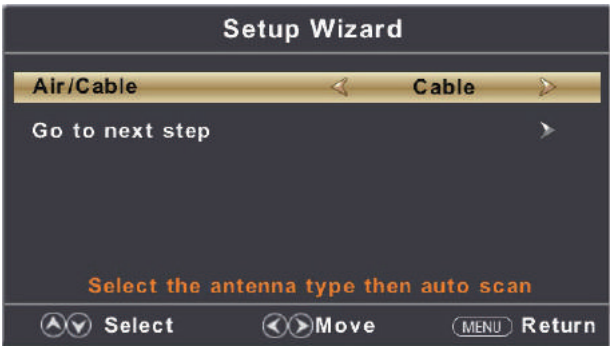

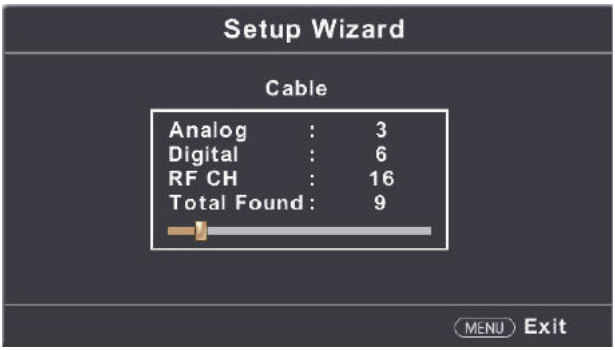

Setup Menu

Press **MENU** to enter the main menu, Press ◄ / ► button to select.
Press **ENTER** / ▼ to enter.
Press **MENU** again to exit or back to parent menu.





Press ▼ / ▲ button to select among Menu Language / Transparent / OSD Timeout / Closed Caption /Over Scan/ Input Label / Other settings / Restore Default / Setup Wizard/Voice Guidance/Video Description.
Press **ENTER** / ▼ to enter.
Press ◄ / ► button to adjust.
Press **MENU** again or back to parent menu.

Picture Menu

Press **MENU** to enter the main menu, Press ◄ / ► button to select.
Press **ENTER** / ▼ to enter.
Press **MENU** again to exit or back to parent menu.



Press ▼ / ▲ button to select among Picture Mode /Brightness/ Contrast / Color / Tint / Sharpness / Color Temperature/ Advanced Settings.
Press **ENTER** / ▼ to enter.
Press ◄ / ► button to adjust.
Press **MENU** again or back to parent menu.

Sound Menu

Press **MENU** to enter the main menu, Press ◄ / ► button to select.
Press **ENTER** / ▼ to enter.
Press **MENU** again to exit or back to parent menu.





Press ▼ / ▲ button to select among Sound Mode/Treble / Bass / Balance /MTS/ Audio Language /Digital Audio Output/ Surround Sound/AVL.
Press **ENTER** / ▼ to enter.
Press ◄ / ► button to adjust.
Press **MENU** again or back to parent menu.

Time Menu

Press **MENU** to enter the main menu, Press ◄ / ► button to select.
Press **ENTER** / ▼ to enter.
Press **MENU** again to exit or back to parent menu.



Press ▼ / ▲ button to select among Sleep Timer / Time Zone / Daylight Saving Time / Time Format / Auto Clock / Clock.
Press **ENTER** / ▼ to enter.
Press ◄ / ► button to adjust.
Press **MENU** again or back to parent menu.

Lock Menu

Press **MENU** to enter the main menu, Press ◄ / ► button to select.
Press **ENTER** / ▼ to enter.
Press **MENU** again to exit or back to parent menu.



Press ▼ / ▲ button to select among Change Password/Key Lock / System Lock / Input Block / US Rating / Canada Rating / RRT Setting / Reset RRT.
Press **ENTER** / ▼ to enter.
Press ◄ / ► button to adjust.
Press **MENU** again or back to parent menu.

Enter your 4-digital password. Default password is 0000,and if forget what you set, please call the service center.



Channel Menu

Press **MENU** to enter the main menu, Press ◄ / ► button to select.
Press **ENTER** / ▼ to enter.
Press **MENU** again to exit or back to parent menu.



Press ▼ / ▲ button to select among Air/Cable / Auto Scan / Favorite/Channel List / Show/Hide / Channel Number / Channel Label .
Press **ENTER** / ▼ to enter.
Press ◄ / ► button to adjust.
Press **MENU** again or back to parent menu.

Media Menu

Note: Before operating **Media** menu,Plug in USB device, then press **INPUT** button to set the Input Source to **Media** .
Press ◄ / ► button to select **Media** in the Source menu, then press **Enter** button to enter.



Press ◄ / ► button to select the option you want to adjust in the main **Media** menu,
then press **Enter** button to enter.



Media Menu

Press ◄ / ► button to select PHOTO in the main menu, then press **Enter** button to enter.

Press **Menu** button to return back to the previous menu and exit menu to quit.

Press ◄ / ► button to select drive disk you want to watch, then press **Enter** button to enter.

Press ◄ / ► button to select return option to back to the previous menu.



Press ◄ / ► button to select the file you want to watch in the file selecting menu, then press **Enter** button to display picture.

When highlighting the option you select, the file information will appear on the right and picture will be previewed in the center.



Press ◄ / ► button to select the file folder you want to search in the file selecting menu, then press **Enter** button on your remote control to enter sub-menu.

Press ◄ / ► button to select the file you want to delete in the file selecting menu, then press red button on your remote control and press **Enter** button to delete files.

Media Menu

Press ◄ / ► button to select MUSIC in the main menu, then press **Enter** button to enter.

Press **Menu** button to return back to the previous menu and exit menu to quit.

Press ◄ / ► button to select drive disk you want to watch, then press **Enter** button to enter.

Press ◄ / ► button to select return option to back to the previous menu.



Press ◄ / ► button to select the file you want to watch in the file selecting menu,
then press **Enter** button to add the file to play list, press media button to display and operate file details.

When highlighting the option you select, the file information will appear on the right.



Press ◄ / ► button to select menu in the bottom you want to run, then press **Enter** button to operate.

Press **Menu** button to back to the previous menu and exit button to quit the entire menu.

Press ▼ button to hide the menu int the bottom.

Trouble Shooting

Problem	Solution/Issue
TV does not operate	Make sure the power cord is plugged in. Try another AC outlet. Power is off, check fuse or circuit breaker. Unplug unit for an hour, then plug it back in.
Normal picture, but no sound	Check the volume settings. Sound muted? Press MUTE button. Try another channel. Check audio cable connections.
The remote control does not work	Make the remote control is in range with no obstructions. Check the batteries. Correct operating mode set: TV, VCR etc.
Poor sound or no sound	Station or Cable TV experiencing problems, tune to another station. Check sound adjustments (Volume or Mute). Check for sources of possible interference.
Poor picture or no picture	Station or Cable TV experiencing problems, tune to another station. Make sure channels are set into memory. Check antenna or Cable TV connections, adjust antenna. Check for sources of possible interference. Check picture control adjustments.
Poor TV reception	Ensure the antenna amplifier is turned on for Antenna TV. Adjust the antenna position to a stronger signal receiving angle. Check the Antenna connection is tight to the TV. Check there is power supplied to the Antenna distribution box. Confirm your incoming cable is connected to the correct cable / antenna wall connection inside the RV. Ensure the internal RV coax jump cable is connected to the correct port.
Poor Cable / Satellite TV Reception	Ensure antenna amp is turned off for able signal. Check incoming Cable is connected correctly to RV. Ensure cable splitter box has power. Confirm the incoming cable is connected to the correct cable / Satellite wall connection inside your RV. Ensure the internal RV coax jump cable is connected to the correct port. Check Dish has not obstruction.
TV shuts off	Sleep Timer is set. Power interrupted.
TV AV input plays black and white	Check RCA connections on the back of the TV and from the source to ensure they are connected to the correct connections. Ensure the yellow connection is in the correct port.

Customer Support

Warranty

Limited 1 Year Warranty

The Manufacturer warrants this product to be free from defects in workmanship and materials, under normal use and conditions, for a period of 1 year for parts and 90 days for labor from the original date of purchase. The Manufacturer agrees, at its option during the warranty period, to repair any defect in parts, material or workmanship, or to furnish a repaired or refurbished product of equal value in exchange without charge (except for a fee for shipping, handling, packing, return postage, and insurance which will be incurred by the customer). Such repair or replacement is subject to verification of the defect or malfunction and proof of purchase as confirmed by showing the model number on the original dated sales receipt. This warranty is **not transferable** to any person or entity other than the original purchaser, and does not cover the costs incurred from installation, removal, or reinstallation of the product.

The extent of the Manufacturer's liability under this warranty is limited to the repair or replacement provided above. In no event shall the Manufacturer's liability exceed the purchase price paid by the purchaser for the product.

Services provided under the terms of this warranty are your exclusive remedy.

Coverage Does NOT Include:

- Any product which has been subject to damage due to an act of God, misuse, neglect, accident, abuse, commercial use.
- Damage due to improper installation, operation or maintenance, or attempted repair by anyone other than the Manufacturer.
- Damage to external media devices such as DVDs, CDs, iPod, iPhone, MP3 players, and/or memory devices.
- Cosmetic damage, accidental damage, set-up adjustments, panel damage by non-moving images for a long period of time, connection to an improper voltage supply, modification of, or to, any part of the product.
- Re-manufactured units, product sold **"As Is"**, or closeout product.
- The cost of shipping this product to the Service Center and its return to the owner.

Where is the Warranty Valid?

This warranty is valid only in the United States and Canada, and grants specific legal rights. You may also have other rights which vary from state to state.

How to Obtain Service

FOR WARRANTY SERVICE AND INSTRUCTIONS ON HOW TO RETURN YOUR PRODUCT CALL:

U.S.(800) 442-7717

International(574) 522-7781

Our technical support team is available Monday – Friday, 8 am to 5 pm EST

Please make sure to place the product in its original packaging, or packaging that provides the same amount of protection as the original packaging.

River Park Inc.
21953 Protecta Drive | Elkhart, IN 46516
http://www.riverparkinc.com
U.S.(800) 442-7717
International(574) 522-7781