CONTOURE®

SPACE SAVER APPLIANCES

POWER CONVECTION BUILT-IN MICROWAVE SMART AIR FRYER & GRILL

1.1 CU.FT. BUILT-IN STAINLESS STEEL



Model:RV-200S-CON (Stainless Steel)

Before using your appliance, please read this manual carefully and keep it for future reference.

Updated 9-2021

Welcome & Congratulations

Thank you for purchasing this quality CONTOURE ® appliance.

Congratulations on your new Power Convection built-in microwave with smart air fryer and grill.

For your safety and full enjoyment of this product, always read the instruction book carefully before using.



Photograph above includes optional matching trim kit for built-in, space saving installation Model TK-200S

This manual contains important information on the installation, use, and care of your appliance. Please read this manual carefully before installation and operation of this machine to prevent injury and property damage and to take full advantage of your microwave's benefits and features.

SAVE THESE INSTRUCTIONS

SAFETY AND PRECAUTIONS

Thank you for purchasing this quality CONTOURE® appliance.

This manual contains important information on the installation, use, and care of your appliance. Please read this manual carefully before installation and operation of this machine to prevent injury and property damage.

WHAT YOU NEED TO KNOW ABOUT SAFETY INSTRUCTIONS

Warnings and Important Safety Instructions in this manual DO NOT cover all possible conditions and situations that may occur. It is your responsibility to use common sense, caution and care when installing, maintaining and operating this appliance.

IMPORTANT SAFETY SYMBOLS AND PRECAUTIONS WARNING



This symbol indicates that hazards or unsafe practices may cause **serious personal injury or death.**

To reduce the risk of fire, explosion, electric shock, or personal injury when using your appliance, these basic safety precautions MUST be followed.

These warnings are to prevent injury to you and to others. Please follow the explicitly.

After reading this section, keep it in a safe place for future reference.

STATE OF CALIFORNIA PROPOSITION 65 WARNINGS



WARNING

The California Safe Drinking Water and Toxic Enforcement Act requires the Governor of California to publish a list of substances known to the State of California to cause cancer, birth defects, or other reproductive harm, and requires business to warn of potential exposure to such substances.

This product contains a chemical known to the State of California to cause cancer, birth defects, or other reproductive harm. This appliance can cause low-level exposure to some of the substances listed, including benzene, formaldehyde, and carbon monoxide.

SAVE THESE INSTRUCTIONS

IMPORTANT SAFETY INSTRUCTIONS



WARNING

WARNING - When using electrical appliances basic safety precautions should be followed, including the following. To reduce the risk of burns, electric shock, fire, injury to persons or exposure to excessive microwave energy.

- Read all instructions before using the appliance.
- Read and follow the specific: "PRECAUTIONS TO AVOID POSSIBLE EXPOSURE TO EXCESSIVE MICROWAVE ENERGY" found on page 2.
- This appliance must be grounded. Connect only to properly grounded outlet. See "GROUNDING INSTRUCTIONS" found on page 5.
- Install or locate this appliance only in accordance with the provided installation instructions.
- As with any appliance, close supervision is necessary when used by children.
- When cleaning surfaces of door and oven that comes together on closing the door, use only mild, nonabrasive soaps, or detergent applied with a sponge or soft cloth.
- Keep cord away from heated surface.
- Liquids, such as water, coffee, or tea are able to overheat beyond the boiling point without appearing to be boiling. Visible bubbling or boiling when the container is removed from the microwave oven is not always present.
  THIS COULD RESULT IN VERY HOT LIQUID SUDDENLY BOILING OVER WHEN THE CONTAINER IS DISTURBED OR A UTENSIL IS INSERTED INTO THE LIQUID. To reduce the risk of injury to persons:
  1. Do not overheat the liquid.
  2. Stir the liquid both before and halfway through heating it.
  3. Do not use straight-sided containers with narrow necks.
  4. After heating, allow the container to stand in the microwave oven for a short time before removing the container.
  5. Use extreme care when inserting a spoon or other utensil into the container.
- Oversized food or oversized metal utensils should not be inserted in a microwave/toaster oven as they may create a fire or risk of electric shock.
- This appliance should be serviced only by qualified service personnel. Contact nearest authorized service facility for examination, repair, or adjustment.
- To reduce the risk of fire in the oven cavity:
  1. Do not overcook food. Carefully attend appliance when paper, plastic, or other combustible materials are placed inside

SAVE THESE INSTRUCTIONS

IMPORTANT SAFETY INSTRUCTIONS (CONTINUED)

ARNING

WARNING -When using electrical appliances basic safety precautions should be followed, including the following. To reduce the risk of burns, electric shock, fire, injury to persons or exposure to excessive microwave energy.

the oven to facilitate cooking.

2. Remove wire twist-ties from paper or plastic bag before placing bag in oven.
3. If material inside of the oven ignite, keep oven door closed, turn oven off, and disconnect the power cord, or shut off power at the fuse or circuit breaker panel.
4. Do not use the cavity for storage purposes. Do not leave paper products, cooking utensils, or food in the cavity when not in use.

- Some products such as whole eggs and sealed containers, for example, closed glass jars are able to explode and should not be heated in this oven.
- Do not store this appliance outdoors. Do not use this product near water for example, near a kitchen sink, in a wet basement, near a swimming pool, or similar location.
- Do not immerse cord or plug in water or any other liquid.
- Use this appliance only for its intended use as described in the manual. Do not use corrosive chemicals or vapors in this appliance. This type of oven is specifically designed to heat, cook or dry food. It is not designed for industrial or laboratory use.
- Do not operate this appliance if it has a damaged cord or plug, if it is not working properly, or if it has been damaged or dropped.
- Do not cover or block any openings on the appliance.
- Do not clean with metal scouring pads. Pieces can burn off the pad and touch electrical parts involving a risk of electric shock.
- Do not let cord hang over edge of table or counter.
- Do not use paper products when appliance is operated in the toaster mode.
- Do not store any materials, other than manufacturer's recommended accessories, in this oven when not in use.
- Do not cover racks or any other part of the oven with metal foil. This will cause over-heating of the oven.
- Do not store anything directly on top of the appliance surface when the appliance is in operation.
- Do not operate any heating or cooking appliance beneath the appliance. (Exception: A microwave oven investigated for use above another heating appliance.)
- Do not mount over sink

SAVE THESE INSTRUCTIONS
HOUSEHOLD USE ONLY(NOT FOR COMMERCIAL USE)

IMPORTANT SAFETY INSTRUCTIONS (CONTINUED)

PRECAUTIONS TO AVOID POSSIBLE EXPOSURE TO EXCESSIVE MICROWAVE ENERGY

(a). Do not attempt to operate this oven with the door open since open door operation can result in harmful exposure to microwave energy. It is important not to defeat or tamper with the safety interlocks.
(b). Do not place any object between the oven front face and the door or allow soil or cleaner residue to accumulate on sealing surfaces.
(c). Do not operate the oven if it is damaged. It is particularly important that the oven door closes properly and that there is no damage to the:
  (1). DOOR (bent)
  (2). HINGES AND LATCHES (broken or loosened)
  (3). DOOR SEALS AND SEALING SURFACES
(d). The oven should not be adjusted or repaired by anyone except properly qualified service personnel.

WARNING

DANGER- ELECTRIC SHOCK HAZARD

- Touching some of the internal components can cause serious personal injury or death.
- DO NOT disassemble this appliances

WARNING – Electrical Shock Hazard :

- Improper use of the grounding can result in electric shock.
- DO NOT plug into an outlet until appliance is properly installed and grounded.

Safety and Precautions

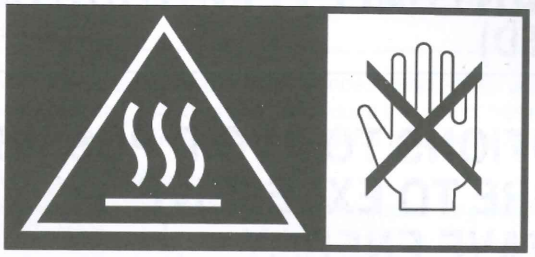



CRITICAL INSTALLATION WARNINGS

The installation of this appliance MUST be performed by a qualified technician or service company.

Failing to have a qualified technician or service company install the oven may result in electric shock, fire, an explosion, problems with the product or injury.

Keep all packaging materials out of the reach of children. DO NOT allow children to use them for play.

Safety and Precautions

GROUNDING INSTRUCTIONS
(SAVE THESE INSTRUCTIONS)

This appliance must be grounded.
In the event of an electrical short circuit, grounding reduces the risk of electric shock by providing an escape wire for the electric current. This appliance is equipped with a cord having a grounding wire with a grounding plug. The plug must be plugged into an outlet that is properly installed and grounded.

WARNING - Improper use of the grounding can result in a risk of electric shock. Consult a qualified electrician or serviceman if the grounding instructions are not completely understood, or if doubt exists as to whether the appliance is properly grounded. If it is necessary to use an extension cord, use only a 3-wire extension cord that has a 3-blade grounded plug, and 3-slot receptacle that will accept the plug on the appliance. The marked rating of the extension cord shall be equal to or greater than the electrical rating of the appliance.

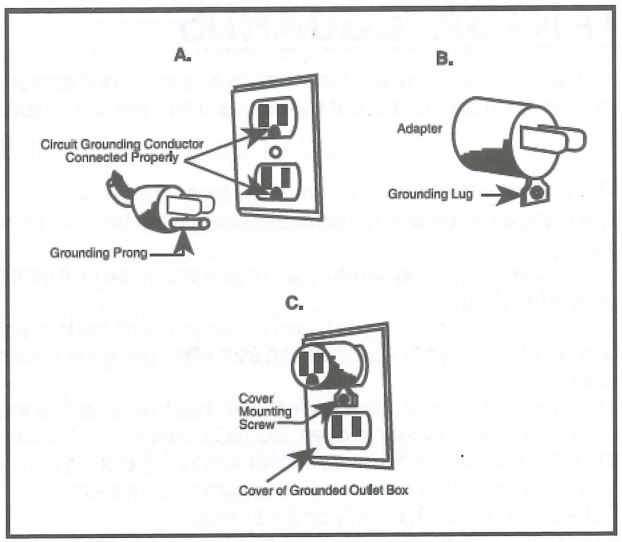

1. A short power-supply cord is provided to reduce the risks resulting from becoming entangled in or tripping over a longer cord.
2. Longer cord sets or extension cords are available and may be used if care is exercised in their use. If a long cord or extension cord is used:
   (1). The marked electrical rating of the cord set or extension cord should be at least as great as the electrical rating of the appliance.
   (2). The extension cord must be a grounding-type 3-wire cord.
   (3). The longer cord should be arranged so that it will not drape over the counter top or tabletop where it can be pulled on by children or tripped over unintentionally.

Safety and Precautions

RADIO INTERFERENCE

1. Operation of the microwave oven may cause interference to your radio, TV or similar equipment.
2. When there is interference, it may be reduced or eliminated by taking the following measures:
   (1). Clean door and sealing surface of the oven.
   (2). Reorient the receiving antenna of radio or television.
   (3). Relocate the microwave oven with respect to the receiver.
   (4). Move the microwave oven away from the receiver.
   (5). Plug the microwave oven into a different outlet so that microwave oven and receiver are on different branch circuits.

This device complies with part 18 of the FCC Rules.

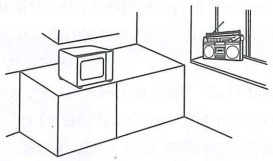

IMPORTANT SAFEGUARDS

WARNING - To reduce the risk of fire, electric shock, burns, injury or exposure to excessive microwave energy and when using electrical appliances, follow basic precautions, including the following:

- The oven must be placed on a level surface
- The glass turntable and turntable assembly must be in the oven during cooking
- Handle glass turntable carefully and place cookware on it gently to avoid possible breakage.
- Incorrect use of browning dish may cause the turntable to break.
- Use only the correctly specified bag size when using the preset popcorn program
- The oven has several built-in safety switches to ensure that the power remains off when the door is open. DO NOT tamper with these switches.
- DO NOT operate the microwave oven empty. Operating with no food or food that is low in moisture *can cause* fire, charring or sparking.
- DO NOT cook bacon directly on the turntable
- Excessive local heating of the turntable may cause the turntable to break
- DO NOT heat baby bottles or baby food in the microwave oven. Uneven heating / hotspots may occur and cause injury.
- DO NOT heat narrow-necked containers, like as syrup bottles.
- DO NOT attempt to deep-fry in your microwave oven.
- DO NOT attempt home canning in this microwave oven. It is impossible to be sure all contents of the jar have reached boiling temperature.
- DO NOT use this microwave oven for commercial purposes. This microwave oven is made for household use only.
- Failure to maintain the oven in a clean condition could lead to deterioration that could adversely affect the life of the appliance and possibly result in a hazardous situation.

About Microwave Cooking

MATERIALS YOU CAN USE IN A MICROWAVE

Arcing is a spark or electric flash that crackles and/or pops. Arcing can produce heat that is very intense and can damage the interior of the microwave or container(s) used.

Arcing can also cause fire. Arcing occurs when metal containers are used in the microwave. Arcing can also occur with the use of metal skewers, metal clamps, or twist ties from plastic bags
like bread bags.

To prevent arcing, use the charts to determine the materials that are microwave safe and follow instructions from the container manufacturer.

Plastic cookware designed for microwave cooking should be used carefully. Some plastic containers advertised as "microwave safe" plastic containers may not be as tolerant of overcooking conditions like their glass or ceramic counterparts. These containers may soften or char if subjected to short periods of overcooking. In longer exposures to overcooking, the food and cookware may ignite.

- Use "microwave safe" plastics only in strict compliance with the recommendations provided by the cookware manufacturer.
- DO NOT microwave empty cups or containers.
- DO NOT permit children to use plastic cookware unsupervised

CAUTION: PERSONAL INJURY HAZARD



WARNING

Personal Injury Hazard:
Tightly-closed utensils could explode. Closed containers should be opened and plastic pouches should be pierced before cooking.
See the instructions on "Materials you can use in microwave oven ." or "Materials can not be used in microwave oven ."
There may be certain non-metallic utensils that are not safe to use for microwaving. If in doubt, you can test the utensil in question following the procedure below.

MATERIAL / CONTAINER TEST:

1. Fill a microwave-safe container with 1 cup of cold water (250ml) along with the utensil in question.
2. Cook on maximum power for 1 min.
3. Carefully feel the utensil. If the empty utensil is warm, do not use it for microwave cooking.
4. Do not exceed 1 min cooking time.

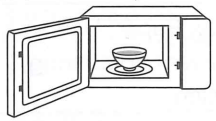

NOTE - KEEP THE CAVITY CLEAN

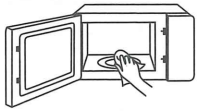

About Microwave Cooking

MATERIALS YOU CAN USE IN A MICROWAVE | COOKWARE

It is not required to buy all new cookware after purchasing your microwave oven.

Many of the cookware pieces you already own can be used successfully in your new power convection microwave oven.

The chart below will help you decide what utensils, containers and coverings may be used with each feature. Make sure utensils DO NOT touch the interior walls of the oven during cooking.

Cookware	Microwave	Convection	Combination
Heat-Resistant Glass, Glass-Ceramic (Corning Ware ®, Pyrex ®, etc.	Yes	Yes	Yes
Metal	No	Yes	No
Non-Heat Resistant Glass	No	No	No
Microwave-Safe Plastics	Yes	No	Yes
Plastic Films and Wraps	Yes	No	No
Paper Products	Yes	No	No
Staw, Wicker, Wood	No	No	No
Dinnerware: Microwave safe only. Follow manufacturer's instructions. DO NOT use cracked or chipped dishes.	Yes	No	No
Oven Cooking bags: Follow manufacturer's instructions. DO NOT close with metal ties. Make slits to allow steam to escape.	Yes	Yes	Yes
Wax Paper: Use as a cover to prevent splattering & keep moisture inside.	Yes	No	No

About Microwave Cooking

MATERIALS TO BE AVOIDED IN A MICROWAVE OVEN

The chart below will help you decide what utensils, containers and coverings may be used with each feature. Make sure utensils DO NOT touch the interior walls of the oven during cooking.

Materials to be AVOIDED in a Microwave	
Aluminum tray	May cause arcing. Transfer food to microwave-safe dish.
Food carton w/ metal handle	May cause arcing. Transfer food to microwave-safe dish.
Metal or Metal-trimmed utensils	Metal shields the food from microwave energy. Metal trim may cause arcing.
Metal twist ties	May cause arcing and could cause a fire in the oven.
Paper bags	May cause a fire in the oven.
Plastic foam	Plastic foam may melt or contaminate the liquid inside when exposed to high temperatures.
Wood	Wood willd ry out when used in the microwave oven and may split or crack

UNDERSTANDING YOUR OVEN

DO NOT use the oven without the turntable and support OR turn the turntable over so that a large dish can be placed in the oven.

The turntable will turn both clockwise and counterclockwise.

ALWAYS have food in the oven when it is on to absorb the microwave energy.

When using the oven at power levels below 100% you might hear the magnetron cycling on and off.

It is normal for the exterior of the oven to be warm to the touch when cooking or reheating.

Condensation is a normal part of microwave cooking. The humidity in a room and the moisture in food will influence the amount of moisture that condenses in the oven. Usually, covered foods will not cause as much condensation as uncovered foods.

The cooling fan will go off after you use the CONVECTION, GRILL/COMBINATION or CONVECTION/ROAST features. The fan will operate until the temperature inside the oven cools.

About Microwave Cooking

UNDERSTANDING YOUR OVEN (CONTINUED)

Convection microwaves will become HOT after use. Look for the top grill or grill and convection symbols to be lighted in the display panel when the unit is hot.

DO NOT use the oven for anything other than food preparation.

DO NOT use the oven to dry clothes or newspapers.

The wattage of this oven is 1000 watts as rated by the IEC Test Procedure method. When using your own recipes or package directions please check the food a minute or two before the minimum time and add time accordingly. Depending on the recipe this oven may cook food more quickly then your traditional oven.

MICROWAVE OVEN SPECIFICATIONS

Model:	RV-200S-CON
Rated Voltage:	120V~60Hz
Rated Input Power(Microwave):	1500W
Rated Output Power(Microwave):	1000W
Rated Input Power(Grill):	1150W
Rated Input Power(Convection):	1500W
Oven Capacity:	1.1 Cu.ft (28 Litre)
Turntable Diameter:	12.5 inch (315 mm)
ExternalDimensions(LxWxH):	20.47 X18.27X 12.83 inch (520X464X326 mm)
Net Weight:	Approx 45.0 Lbs (20.41 kg)

Parts & Accessories

SETTING UP YOUR OVEN (PARTS & ACCESSORIES)

Thank you for purchasing this quality CONTOURE® appliance. We are excited for you to get started using your new Power Convection Microwave Oven, Grill and Smart Air Fryer.

Remove all packaging materials and accessories from the carton and oven cavity.

Examine your new oven for any damage, like dents, or a broken door. DO NOT continue with installation if the oven is damaged.

SETTING UP YOUR OVEN

Your new oven comes with the following accessories:

Turntable ring assembly 1
Instruction Manual 1

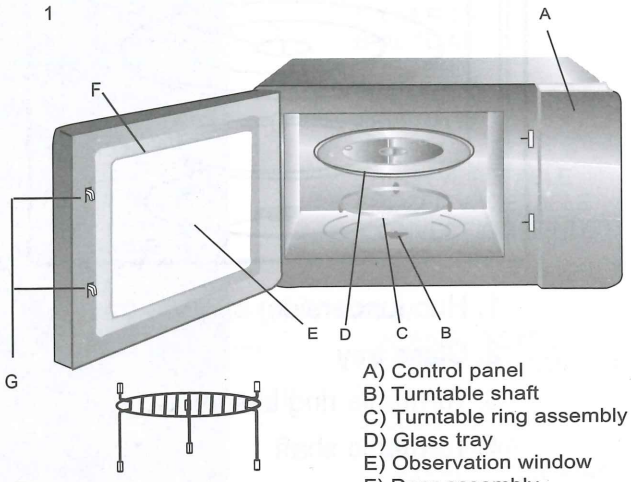

A) Control panel
B) Turntable shaft
C) Turntable ring assembly
D) Glass tray
E) Observation window
F) Door assembly
G) Safety interlock system



Grill Rack(Can not be used in microwave function and must be placed on the glass tray)

This oven also includes a BONUS easy-to-clean baking tray to use with your favorite foods, like pizza, cookies and more!

Parts & Accessories

SETTING UP YOUR OVEN (TURNTABLE INSTALLATION)

Please reference the diagram below to help during installation.

NEVER place the glass tray upside down. The glass tray should NEVER be restricted.

Both glass tray and turntable ring assembly must always be used during cooking.

All food and containers of food should always be placed on the glass tray for cooking.

If you are missing your glass tray or turntable ring assembly or it cracks or breaks, please contact your retail store where purchased. You may also reach out to customer service, see the warranty & service section for further information.

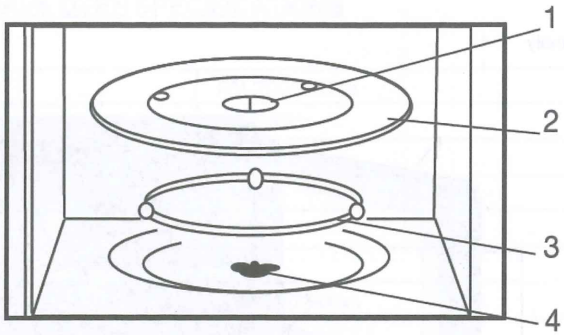

1. Hub (underside) of glass tray
2. Glass tray
3. Turntable ring assembly
4. Turntable shaft

Control Panel & Features

UNDERSTANDING THE CONTROL PANEL

Please reference the diagram below:

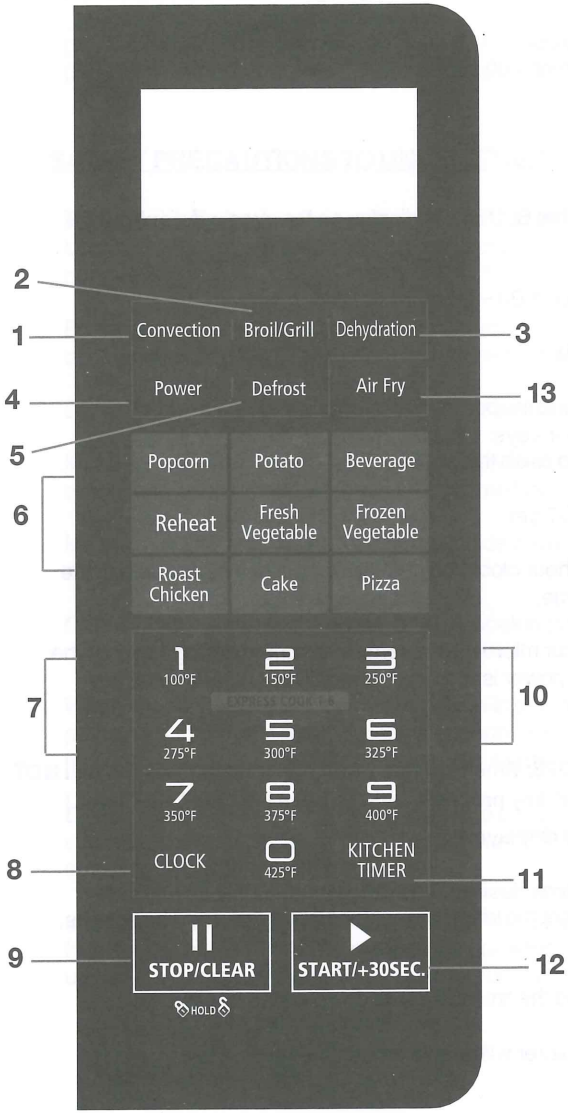

Microwave Oven Settings:

1- CONVECTION
2- BROIL/GRILL
3- DEHYDRATION
4- POWER
5- DEFROST
6- AUTO MENUS:
POPCORN
POTATO
BEVERAGE
REHEAT
FRESH VEGETABLE
FROZEN VEGETABLE
CONVECTION MENU:
ROAST CHICKEN
CAKE
PIZZA
7- NUMBER KEYS & CONVECTION TEMPERATURE KEYS
8- CLOCK SETTINGS
9- STOP / CLEAR
10- EXPRESS COOKING
11- KITCHEN TIMER
12- START / + 30 SEC.
13- AIR FRY

Operation Instructions

BEFORE OPERATIONG YOUR OVEN

Before operating your new microwave oven it is important that you read and understand the instruction booklet and operating instructions completely.

Before the oven can be used, please complete the following procedures:

(1) Plug in the oven and close the door
(2) Touch the Stop/Clear pad so that 0:00 appears
(3) Set the clock

SET THE DISPLAY CLOCK

After the microwave is plugged in the BLUE LED display on the oven will display 0:00 and a buzzer will beep once.

The input time needs to be between 1:00 – 12:59.

EXAMPLE: To set 10:30 AM or PM

- Press CLOCK and the buzzer will beep once
- Press the number keys: 1,0,3,0
- Press CLOCK to finish this setting.

If 0:00 is displayed the clock is NOT set

This microwave comes with a 12-hour clock. To change or correct a setting, touch the Stop/Clear pad and re-enter the time.

If the electrical power supply to your microwave oven is interrupted during cooking, the program will be erased. When the power is restored, press "CLOCK" and reset the clock for the correct time of day.

SET THE KTICHEN TIMER

(NOTE: When kitchen timer is engaged, the oven will NOT start any program and the oven light, will NOT light.)

Press KITCHEN TIMER so 0:00 is displayed.

Press the number keys to set the time desired. The range must be within 99 minutes and 99 seconds. For example, to set the kitchen timer for 10 minutes and 15 seconds, press 1,0,1,5 in turn.

Press Start/+30SEC to confirm and the time will count down on the display.

When the time is complete, the buzzer will beep 5 times.

Operation Instructions

STOP / CLEAR

Touch the STOP/CLEAR pad if you would like to:

(1) Erase your selection if you made a mistake during program selection.
(2) Cancel the kitchen timer set.
(3) Return the time to the display
(4) Touch once to temporarily stop the oven during cooking
(5) Touch twice to cancel a program during cooking

SATEFY PRECAUTIONS TO UNDERSTAND (PLEASE READ CAREFULLY)

Before enjoying foods, please check to see that they are cooked in accordance with the United States Department of Agriculture's recommended temperatures prior to consuming.

Be careful and use care when removing items from the oven so that your clothes or cooking accessories DO NOT touch the safety door latches.

DO NOT use the interior of the oven for storage of any kind.

Make sure to select, store and handle food with extreme caution to preserve food quality and minimize the spread of foodborne bacteria.

Maintain a clean microwave and micro-guide cover. Food residue may cause arcing and/or fires.

Check cooking progress frequently while cooking to eliminate any chanceof overcooking food.

When handling utensils or cookware that is in contact with hot food ALWAYS use potholders to prevent burns. There is enough heat from the food that can transfer through utensils or cookware to cause skin burns.

Direct steam AWAY from face and hands to avoid steam burns. Carefully open popcorn or other oven cooking bags AWAY from your face. Lift the farthest edge of cookware's covering slowly and away from face.

If testing foods "readiness, "insert a meat thermometer into a thick or dense area away from fat or bone. DO NOT leave the thermometer in the food during cooking, EVER, unless it is approved by the manufacturer for use in a microwave oven.

Operation Instructions

MICROWAVE COOKING

Let's get started!

Your microwave has 10 preset power levels. Pressing POWER will allow you to change or choose the power level.

You can program your oven for up to 99 minutes and 99 seconds. Enter the seconds after the minutes even if they are both 0 (zeros).

To increase cook time, use the power levels. It is recommended to increase cooking time when cooking long, slow cooking beef, milk and cheeses.

START COOKING

- Continually press POWER to select the desired microwave power level
- Power level will be displayed on the display panel
- Press the number keys to enter the desired cooking time
- When you're ready to start cooking press START/+30SEC to start cooking, the remaining cook time will be displayed until cooking is complete
- If you need to pause cooking, press the STOP/CLEAR button once
- If you need to stop cooking, press the STOP/CLEAR button twice

EXPRESS COOKING

Since your oven's power level is preset to 100%, EXPRESS COOKING is a shortcut to oven programming.

You can select cooking times in increments of 1 to 6 minutes or 30-seconds.

- Press EXPRESS COOK to select a cooking time in increments of 1 to 6 minutes by pressing the numbers on the number pad (1-6)
- Your oven will start right away once the number pad is pressed
- Press START/+30SEC to increase cooking time by 30-second increments OR press START/+30SEC to cook for 30-seconds only

Operation Instructions

POWER LEVELS

The default power level for your microwave oven is HIGH. To change the power level to something other than HIGH, repeatedly press the power button until the power level you desire is reached.

Power counts down from HIGH to LOW and the number buttons allow you to set the cooking time. (Cooking times range between 99 minutes and 99 seconds)

EXAMPLE: Use 80% microwave power to cook for 10 minutes.

- Press POWER once, the display will display PL10, MICRO and the indicator will light
- Press POWER two more times and chose 80% power (the display will read PL8)
- Select the cook time by pressing the number buttons 1,0,0,0. The oven display will then read 10:00 confirming the cook time.
- Press START/+30SEC to begin cooking
- When cooking begins the indicator light will flash

Press Power To Select Desired Power Level	Approx % of Power	Word for Power Levels
PL 10	100%	High
PL 9	90%	
PL 8	80%	
PL 7	70%	Medium/Hight
PL 6	60%	
PL 5	50%	Medium
PL 4	40%	
PL 3	30%	Medium/Low
PL 2	20%	
PL 1	10%	Low

Operation Instructions

DEFROST

This is the perfect feature if you want to defrost by weight or by time

To DEFROST BY WEIGHT

- Press DEFROST once so the oven displays dEF1. Micr. and indicators will light
- Use the number keys to set defrosting weight within the range of 4-100 ounces
- Press START/+30SEC to begin defrosting

To DEFROST BY TIME

- Press DEFROST twice so the oven displays dEF2. Micr. and indicators will light
- Use the number keys to set defrosting time
- Press START/+30SEC to begin defrosting

MULTI-STAGE COOKING TECHNOLOGY

Smart MULTI-STAGE cooking technology allows you to program the oven to automatically change functions. Up to 2 (two) stages of cooking can be set.

After each cooking stage is completed the buzzer will ring once and the next stage will begin.

If defrosting is one of the steps, it should be used as the first stage.
EXPRESS COOKING cannot be used as stages in multi-stage cooking.

EXAMPLE: Defrost for 5 minutes, cooking using 100% microwave power for 5 minutes.

- Press DEFROST twice to set the time
- Press the number keys 5,0,0 to set defrost time
- Press POWER once, PL10 will show on the display
- Press the number keys 5,0,0 to set the desired cooking time
- Press START/+30SEC to begin MULTI-STAGE cooking

If you want to use MULTI-STAGE cooking together with the grill feature, press the BROIL/GRILL key once, G-1 will show on the display, the press START/+30SEC to begin MULTI-STAGE cooking with grill (browner).

Convection Cooking

UNDERSTANDING CONVECTION COOKING

The CONVECTION feature of this oven allows you to use your microwave oven as a traditional oven. When the CONVECTION function is on the microwave function is NOT used.

The CONVECTION feature can be used for cooking, baking, roasting, reheating and grilling foods offering limitless family cooking options.

CONVECTION cooking technology uses a heating element to raise the temperature of the air inside the oven. A fan circulates this heated air throughout the oven, in, over and around the food to cook foods with moist interiors and browned exteriors. CONVECTION cooking is faster than traditional cooking because the hot air is constantly moving in, over and around the food you are cooking.

One of the many benefits of CONVECTION cooking is it keeps nutrients and moisture inside your food and eliminates "hot spots" caused by traditional microwave oven cooking.

There are 2 different setting options when using CONVECTION cooking (1) convection with preheating and (2) convection without preheating.

Before you begin cooking with CONVECTION cooking technology please keep the following in mind:

- REMOVE the turntable when preheating the oven and/or when preparing food that will be cooked directly on the turntable surface
- DO NOT use the oven without the turntable in place
- DO NOT restrict the turntable so that it cannot rotate
- DO NOT cover the turntable or rack with aluminum foil or it will interfere with the ventilation and disrupt the airflow needed to cook foods.
- When selecting cookware, choose pans that do not have extended sides (like the BONUS BAKING TRAY included with your unit)
- Preheat the oven to the desired cooking temperature before placing food in the oven
- Remember to check food 5-10 minutes before the expected finish time when preparing conventional oven recipes
- If food is not cooked completely, continue cooking in oven until it reaches your desired level of cooking
- When using multi-level cooking, please use the grill rack provided for best results. When foods are baked or roasted on the provided grill rack best results are achieved.
- The lower grill rack position is best used for baking and roasting
- The upper grill rack position is best used for grilling and browning
- We recommend roasting meat and poultry directly on the grill rack provided with a shallow dish below the rack to catch drippings and to reduce splatter
- Cooking bags can be used when roasting less tender cuts of meat

Convection Cooking

CONVECTION SETTINGS

There are 2 different setting options when using CONVECTION cooking (1) convection with preheating and (2) convection without preheating.

You can preheat your oven to the convection temperature required.

CONVECTION Cooking with Preheating
EXAMPLE: Preheat to 350F and cook 30 minutes at the same temperature

- Press the CONVECTION button once and the oven will display 100F and the Conv. Indicator will light.
- Press the 7 number key to set the temperature to 350F
- Press START/+30SEC to begin preheating
- Once the oven reaches the desired preheated temperature the temperature will flash on the display so you can open the door, put the food in the oven and close the door to begin cooking.
- Press the number keys 3,0,0,0 to set the cooking time.
- Press START/30+SEC to begin cooking (the cooking time will count down on the LED display)
- Cooking time CANNOT be entered until the preheating temperature is completed. Once preheating is complete food can be placed in the oven and the cooking time can be entered. If cooking time is NOT entered within 5 minutes the oven will stop preheating

CONVECTION Cooking without Preheating

- Press the CONVECTION button once and the oven will display 100F
- Press the convection temperature key to enter the temperature desired
- Press the CONVECTION button to confirm desired temperature
- Use the number keys to set the desired cooking time
- Press START/+30SEC to begin cooking (the cooking time will count down on the LED display)

COMBINATION COOKING SETTINGS

This microwave offers a unique feature that increases cooking speed and accuracy, by combining microwave energy and convection cooking leaving foods perfectly browned and and deliciously crisp just by entering the cooking time.

The convection ROAST feature combines CONVECTION cooking technology and quick cooking microwave energy to roast juicy meats and browned poultry.

We recommend using the grill rack provided for best results and air flow.

Food Dehydration

USING DEHYDRATION

1.Press **Dehydration** once, the oven LED will display **LP**.
2.Press the **number buttons** to select the expected function,

a)for **Warming box**, Press **number 1**, LED will display **L1**.
b)for **Keep warm**, Press **number 2**, LED will display **L2**.
c)for **Food dry**, Press **number 3**, LED will display L3.
d)for **yogurt/ferment**, Press **number 4**, LED will display **L4**.
e)for **Slow cook**, Press **number 5**, LED will display **L5**.
---explanation of Warming box: reheat the coffee mug, plate, bowl and any other containers.
3. Press the **corresponding number bottons** to select the temperature level
There are different levels of temperature,Taking **Food Dry** for example, press **number 3** once, the temperature will be 105F; press **number 3** twice, it will be switched to 120F.....and press **Dehydration** to confirm the expected temperature level.
Press the **number buttons** to set the expected **cooking time**.
4. Press START/+30SEC to start cooking(the cooking time will count down on LED display).
5. The buzzer will sound 5 times when cooking is finished.
It will display current time if you set clock in advance, or it will return to the standby status.
6. Remark (Warming Box & Keep Warm)
a)If you set zero for cooking time, there will be no responding when you are pressing START/+30SEC.
b)If you set the cooking time less than 5 sec then the cooking time will be exactly 5 sec when you are pressing START/+30SEC.
c)If you set the cooking time over 95 min then the cooking time will be exactly 95 min when you are pressing START/+30SEC.

Remark (Food Dry, yogurt/ferment & Slow cook)
a)If you set zero for cooking time, there will be no responding when you are pressing START/+30SEC.
b)If you set the cooking time less than 10 min then the cooking time will be exactly 10 min when you are pressing START/+30SEC.
c)If you set the cooking time over 12 hrs then the cooking time will be exactly 12 hrs when you are pressing START/+30SEC.
d)When you set 5 hours 10 minutes, it shows 05:10, when it counts down to 1 minute, it shows 00:01, and next second it wil turn into 00:59 to count down 59 seconds.

Display	Fuction	Time Range	Temperature Level
L1	Warming box	5sec~95min	105°F /120°F /140°F /160°F /175°F /195°F/210°F
L2	Keep warm	5sec~95min	140°F /160°F /175°F
L3	Food dry	10min~ 12hour	105°F /120°F /140°F /160°F /175°F /195°F
L4	yogurt/ ferment	10min~ 12hour	105°F
L5	Slow cook	10min~ 12hour	195°F /230°F

SMART Air Fry

USING YOUR AIR FRYER

For a healthier alternative to your favorite fried foods, try our new SMART AIR FRY setting.

Based on popularly fried foods we have included 9 easy to use, automatic settings for everything from home cooked fries to fried chicken. You do not need to set the cooking time or the power level.

Once your desired food is determined, follow the following steps to begin frying:

- Press AIR FRY once. The oven LED display will display A1
- Press the number buttons 1- 9 depending on the desired food
- Press START/+30SEC to begin air frying (the frying time will count down on the LED Display and the indicator will beep when the food is ready)

For Fried Chicken select, press number 1

For Frozen Chicken select, press number 2

For Fried Pork, select number 3

For Fried Tater Tots, select number 4

For Fried Shrimp, select number 5

For Fried Calamari, select number 6

For Fried Onion Rings/Onion Straws, select number 7

For Fried Tempura Style Vegetables, select number 8

For French Fries, select number 9

Be cautious when using metal baking utensils as some may cause arcing when coming in contact with the oven turntable, oven walls or grill rack. Please check to ensure your cookware is appropriate prior to use.

Convection & Grill

GRILLING

Use the GRILL program to program up to 2 automatic cooking options.

Your oven includes a reversible grill rack. One side has shorter legs to allow you to place food closer to the grilling heat, the side with the longer legs allows you to place food further away from the grilling heat.

G-1 is 100% grilling, and G-2 and G-3 are combination microwave and grill settings.

EXAMPLE: Grill/Microwave and Grill Combination Cooking settings

- Press BROIL/GRILL button once to select the GRILL function
- G-1 will be displayed
- Press the BROIL/GRILL button two or three times to choose the combination function G-2 or G-3
- Enter the desired cooking time (To set 10 minutes, 30 seconds, press the number keys 1,0,3,0)
- Press START/+30SEC to begin cooking (the cooking time will count down on the LED display)

When the grilling time is halfway completed, the oven will signal, but will NOT stop. If desired you can open the door and turn over the food to grill on the other side. Please be cautious when opening the microwave door. If desired, turn the food over, close the door and press the START/+30SEC button to continue cooking.

To give steaks, vegetables, sausages etc. a grilled appearance use a preheated grill rack.

We recommend grilling vegetables or frozen snacks directly on the turntable.

GRILLING PRESETS

The GRILL / COMBINATION Settings explained below:

Grill / Combination	Display	Microwave	Grill
1	G-1		100%
2	G-2	36%	64%
3	G-3	55%	45%

Gourmet Features

EXPRESS COOKING

To help make your microwave oven experience easier we have included several popular automatic settings to help prepare commonly cooked foods.

Each food is cooked using the best cook time as indicated in the below cooking guide.

To use the EXPRESS COOKING settings press the function you need (Example: Popcorn) enter the weight (lbs or oz) or the amount (cups or units) of food, then press START/+30SEC to begin cooking. Keep in mind your final result will vary according to the temperature, shape, etc of the food. Should you desire additional cooking time, press START/+30SEC to add additional cooking time in small increments of 30-seconds.

POPCORN

Only use popcorn packaged for Microwave oven use.

DO NOT try pop un-popped kernels

POTATO

Pierce potato and place directly on turntable. We recommend lining potato with a paper towel.

After cooking, we recommend you remove the potato from the oven, wrap in aluminum foil and let stand on counter for 5 to 10 minutes depending on the potato's size.

BEVERAGE

Carefully test for desired temperature after heating. Reheat if necessary.

DINNER PLATE (REHEAT)

This setting allows you to reheat precooked foods from the refrigerator, making cooking leftovers quick and easy.

We recommend keeping larger portions and vegetables towards the outside of the plate or cutting large items into smaller pieces. Dense foods, like mashed potatoes reheat better if flattened.

Only use microwave-safe lids or microwave-safe plastic wrap to cover foods.

Only reheat ONE plate at a time.

Gourmet Features

FRESH / FROZEN VEGETABLES

We recommend adding 1 tablespoon of water per serving size (1-cup) of corn, peas, carrots or most beans.

When cooking cruciferous vegetables do not add additional water, cook immediately after washing.

For softer or more tender vegetables we recommend using a microwave-safelid.

After cooking and removing vegetables from oven, stir, cover with a microwave-safe lid and let stand for at least 5 minutes prior to serving.

MICROWAVE EXPRESS COOKING GUIDE

Express Cook Guide-MICROWAVE		
Menu	Weight (Oz)	Display
Popcorn	1.75 OZ	1.75 OZ
	3.00 OZ	3.00 OZ
	3.50 OZ	3.50 OZ
Potato	1 portion	1
	2 portions	2
	3 portions	3
Beverage	about 8.80 OZ	1
	about 17.60 OZ	2
	about 26.40 OZ	3
Reheat	8.00 OZ	8.00 OZ
	12.00 OZ	12.00 OZ
	16.00 OZ	16.00 OZ
Fresh Vegetable	4.00 OZ	4.00 OZ
	8.00 OZ	8.00 OZ
	16.00 OZ	16.00 OZ
Frozen Vegetable	4.00 OZ	4.00 OZ
	8.00 OZ	8.00 OZ
	16.00 OZ	16.00 OZ

Express Cook Guide-CONVECTION		
Roast Chicken	16.00 OZ	16.00 OZ
	24.00 OZ	24.00 OZ
	32.00 OZ	32.00 OZ
	40.00 OZ	40.00 OZ
	48.00 OZ	48.00 OZ
Cake	16.00 OZ	16.00 OZ
Pizza	10.00 OZ	10.00 OZ
	22.00 OZ	22.00 OZ

Please consult with the EXPRESS COOKING guides for the best cooking method and results.

Gourmet Features

EXPRESS COOKING WITH CONVECTION

Your microwave has automatic convection cooking settings to help prepare roasted chicken, cake and pizza.

Each food is cooked using the best cook time as indicated in the below cooking guide.

To use the EXPRESS COOKING settings press the function you need (Example: Cake) enter the weight (lbs or oz) or the amount (cups or units) of food, then press START/+30SEC to begin cooking.

ROAST CHICKEN

Using the grill rack provided, place the chicken breast side up on the grill rack and then place the rack on the turntable.

We suggest placing a microwave-safe shallow dish underneath the grill rack to catch drippings and minimize splatter and mess.

When roasting is complete, remove chicken breast from oven, tent with foil and let stand for at least 5-10 minutes before serving.

Please keep in mind the internal temperature of white meat should be 170F and the internal temperature of dark meat should be 180F.

CAKE (Ideal for 8-9 inch cooking pans greased and floured)

This oven is automatically preset for 350 degrees. As soon as the oven reaches the temperature it will beep. Close the oven door, press START/+30SEC once and baking will begin. The LED display will show the temperature 350 degrees.

Once you hear the oven beep, the cake is completed. Allow to cool prior to frosting, decorating and serving.

If you want to bake a 2 layer cake in order to bake both layers simultaneously use the grill rack positioned at a higher level, placing one pan on the bottom of the oven on top of the turntable and the second on top of the grill rack.

PIZZA

Make sure pizza is unwrapped prior to putting in oven. We recommend placing the pizza directly on the grill rack and placing the grill rack on the turntable.

Based on the settings a small pizza is around 8-inches in diameter and a large pizza is considered 12-inches in diameter.

Additional Features

CHILD SAFETY LOCK

Using your child safety lock will prevent unwanted or accidental oven operation by setting the oven to deactivate or lock the control panel.

Lock your control panel by pressing STOP/CLEAR for 3 seconds. You will hear a long beep confirming that the child lock is activated and a lock icon will appear. When the control panel is locked the keypad will NOT be able to be used.

To unlock your control panel, press STOP/CLEAR for 3 seconds. You will hear a long beep confirming that the child lock is deactivated and the microwave oven has been unlocked and the lock icon will disappear.

CHECKING POWER WHILE COOKING

You can check your microwave oven power settings while cooking by pressing CONVECTION, POWER or BROIL/GRILL to check the responding power levels. The power will be displayed on the LED display for 3 seconds.

You can check the time on the display panel while cooking by pressing CLOCK. The time will be displayed for 3 seconds.

Maintenance

KEEP YOUR OVEN CLEAN

Your oven was designed with an easy to sanitize stainless steel interior and deluxe NO FINGERPRINT stainless steel front. ONLY use mild, non-abrasive soaps or detergents with a soft cloth or sponge to clean the oven's surface and oven walls.

DO NOT clean the outside of the microwave oven using cleaners that container ammonia or alcohol as they will damage the appearance of the microwave.

The nonporous oven surface is designed to NOT absorb odors but we recommend an occasional wipe down with a water/baking soda solution to keep the inside fresh.

DO NOT clean any part of this oven without unplugging the cord.

DO NOT use commercial oven cleaner on any part of your microwave.

DO NOT use abrasive cleaners or sharp utensils on oven.

We recommend removing grease first with a soapy cloth and then rinsing with a damp cloth.

The turntable and turntable shaft were designed to be removable and easy to clean.

DO NOT try to wash turntable immediately after cooking. Let it cool prior to placing it in water to prevent risk of breakage.

DO NOT drop the turntable and shaft or it can break.

Make sure you carefully put the turntable and shaft back in the oven after cleaning. DO NOT operate the oven without the turntable, turntable shaft and the ring assembly properly in place.

We recommend wiping down the control panel with a damp cloth and drying it thoroughly. DO NOT use sprays, abrasive or sharp objects, or large amounts of soap on the panel or you will damage it.

Keep the area clean where the door seals against the microwave. Only use mild, non-abrasive detergents with a clean sponge/soft cloth and rinse well.

Troubleshooting

FREQUENTLY ASKED QUESTIONS

Trouble	Possible Cause	Possible Remedy
Oven will not start	(1) Electrical cord is not plugged in. (2) Door is open (3) Wrong operation is set	(1) Plug into the outlet (2) Close the door & try again (3) Check instructions
Arcing / Sparking	(1) Materials to be avoided in Microwave were used (2) The oven is operated when empty (3) Spilled food remains in the cavity.	(1) Use microwave-safe cookware only (2) DO NOT operate with oven empty (3) Clean cavity with wet towel
Unevenly cooked foods	(1) Materials to be avoided in Microwave oven were used (2) Food is not defrosted completely (3) Cooking time, power level is not suitable (4) Food is not stirred	(1) Use microwave-safe cookware only (2) Completely defrost food (3) Use correct cooking time and/or power level (4) Turn or stir food
Overcooked foods	Cooking time and/or power level is not correct	Use correct cooking time and/or power level
Undercooked foods	(1) Materials to be avoided in microwave oven were used (2) Food is not defrosted completely (3) Oven ventilation ports are restricted (4) Use correct cooking time and/or power level	(1) Use microwave-safe cookware only (2) Completely defrost food (3) Check to see that oven ventilation ports are not restricted (4) Cooking time power level is not correct
Improper defrosting	(1) Materials to be avoided in microwave oven were used (2) Cooking time, power level is not correct (3) Food is not turned or stirred	(1) Use microwave-safe cookware only (2) Use correct cooking time and/or power level (3) Turn or stir food

Warranty

LIMITED WARRANTY - Register your product at www.contoureusa.com

This warranty is available to consumers only. You are a consumer if you own a CONTOURE product that was purchased at a retail store for personal, family or household use. Except as otherwise required under applicable law, this warranty is not available to retailers or other commercial purchasers or owners.

Warranty registration is not mandatory, but doing so will help us to service you more quickly if you need to present a warranty claim or notify you if there is a product recall. Please go online to submit your product registration form www.contoureusa.com. Return of product registration does not eliminate the need for the consumer to maintain the original proof of purchase in order to obtain the warranty benefits. In the event that you do not have proof of purchase date, the purchase date for warranty purposes will be the date of manufacture.

NQP warrants this CONTOURE Product ("product") will be free of all defects in material and workmanship for the applicable period specified below commencing from the date of original purchase. This warranty extends to the original buyer only.

Ninety (90) Day Full Warranty Parts & Labor: Within ninety (90) days from the date of original purchase, NQP/CONTOURE in its sole discretion, will either repair or replace, free of charge, any part proving defective in material or workmanship. All warranty repairs and service must be performed at a NQP/CONTOURE location of service by an authorized NQP/CONTOURE technician. All expenses related to replacing or repairing a defective part under this ninety (90) day warranty shall be assumed by except the cost of transporting the product to and from NQP/CONTOURE, which shall be assumed by the buyer. If the product is replaced, the replacement will be with a product that is identical or equivalent to the warranted product. If the product cannot be repaired or replaced, NQP/CONTOURE will issue a refund to the buyer for the original purchase price less that amount directly attributable to use by the buyer.

One (1) Year Limited Warranty: After the expiration of the ninety (90) day warranty, and within one (1) year from the date of original purchase, NQP/CONTOURE will replace any part proving defective in material or workmanship with a product that is identical or equivalent to the warranted part. The buyer shall assume the cost of transporting the defective product to and from NQP/CONTOURE and will assume the cost of labor associated with repair.

DISCLAIMER OF IMPLIED WARRANTIES; LIMITATION OF REMEDIES

Customer's sole and exclusive remedy under this limited warranty shall be product repair or replacement as provided herein. Claims based on implied warranties, including warranties of merchantability or fitness for a particular purpose, are limited to one year or the shortest period allowed by law, but not less than one year. NQP/CONTOURE shall not be liable for consequential or incidental damages such as property damage and incidental expenses resulting from any breach of this written limited warranty or any implied warranty. Some states and provinces do not allow the exclusion or limitation of incidental or consequential damage or limitations on the duration of implied warranties, so these limitations or exclusions may not apply to you. This written warranty gives you specific legal rights. You may also have other rights that vary from state to state.

Warranty

How to Obtain Warranty Service: Upon discovery of any defect, malfunction, or nonconformity in the warranty-covered product, the buyer should visit www.contoureusa.com and submit a warranty claim online. For any questions regarding your warranty you may also email us at warranty@contoureusa.com

Notice to Buyer: This warranty gives the buyer specific legal rights, and the buyer may also have other rights, which vary from state to state. You have the right to bring any action at law or equity to resolve disputes concerning or to enforce the provisions of this warranty. Every implied warranty, including any statutory warranty or condition of merchantability or fitness for a particular purpose, is disclaimed except to the extent prohibited by law, in which case such warranty or condition is limited to the duration and extent of this written warranty.

For added protection and secure handling of any NQP/CONTOURE product that is being returned, we recommend that you use a traceable, insured delivery service.
NQP/CONTOURE cannot be held responsible for in-transit damage or for packages that are not delivered to us. Lost and/or damaged products are NOT covered under warranty. Please be sure to include your return address, daytime phone number, description of the product

additional pertinent information pertaining to the product's return.

Warranty Exclusions: This warranty does not apply to any costs, repairs or services for the following:
-Products with original serial numbers that have been removed, altered or cannot be readily determined or products purchased "as-is"
-Product that has been transferred from its original owner to another party or removed outside of the USA or Canada
-Products used in commercial setting(s)
-Service calls to correct the installation of the warranty-covered products, to explain the usage of the product to the buyer, or to reset or replace home circuit breakers or fuses
-Service calls which do not involve malfunction or defects in materials or workmanship, or for appliances not in ordinary household use or used other than in accordance with the provided instructions.
-Repairs necessitated by use other than normal home use / Products used in commercial settings
-Damage resulting from misuse, abuse, accidents, alterations, improper installation, fire, flood, acts of God or damage caused by the shipping of the product by the buyer to NQP
-Corrective work necessitated by repairs made by anyone other than a NQP authorized service technician / Rust on the interior or exterior of the unit.
-Costs incurred for disposing of the product at locations other than a NQP facility
-Food loss due to any refrigerator or freezer failure.
-Expenses for making the appliance accessible for servicing, such as removal of trim, cupboards, shelves, etc. which are not a part of the appliance when it is shipped from the factory.
-Damages to the finish of appliance or home incurred during installation, including but not limited to floors, cabinets, walls, etc.
-Damages caused by: services performed by unauthorized service companies; use of parts other than genuine NQP/CONTOURE parts or parts obtained from persons other than authorized service companies; or external causes such as abuse, misuse, inadequate power supply, accidents, fires or acts of God.
- Labor costs after ninety (90) days from your original date of purchase incurred for product repair or replacement as provided herein for carry-in appliances.

Warranty

This warranty only applies in the USA and Canada.

In the United States and Canada, your appliance is warranted by NQP/CONTOURE. NQP/CONTOURE authorizes no person to change or add any obligations under this warranty. Obligations for service and parts under this warranty must be performed by NQP/CONTOURE or an authorized service company.

California Residents only: California law provides that for In-Warranty Service, California residents have the option of returning a nonconforming product (1) to the store where it was purchased or (2) to another retail store which sells CONTOURE products of the same type. The retail store shall then, at its discretion, either repair the product, refer the consumer to an independent repair facility, replace the product, or refund the purchase price less the amount directly attributable to the onsumer's prior usage of the product. If the above two options do not result in the appropriate relief to the consumer, the consumer may then take the product to an independent repair facility if service or repair can be economically accomplished.

NQP/CONTOURE and not the consumer will be responsible for the reasonable cost of such service, repair, replacement, or refund for nonconforming products under warranty.

California residents may also, according to their preference, return nonconforming products directly to NQP/CONTOURE for repair, or if necessary, replacement, by calling our Consumer Service Center toll-free at 1-888-656-9317 or sending us an email, warranty@contoureusa.com. NQP/CONTOURE will be responsible for the cost of the repair, replacement, and shipping and handling for such products under warranty.

PN:16170000A86343 YY