IT IS HIGHLY RECOMMENDED THAT THE INSTRUCTIONS BE READ THROUGH BEFORE INSTALLATION.

Genius Retractable Screen Systems MILANO 100 SINGLE DOOR RETRACTABLE SCREEN DOOR **INSTALLATION INSTRUCTIONS**

INSTALLATION TOOLS

PHILLIPS SCREWDRIVER	MEASURING TAPE	HAND-HELD OR POWER SAW	POWER DRILL & BITS
	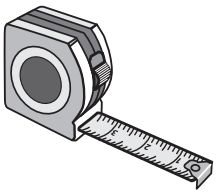	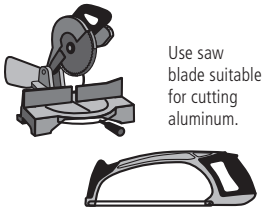 Use saw blade suitable for cutting aluminum.	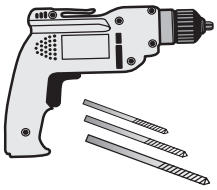

INTRODUCTION

The Genius Milano retractable screen features a fully assembled screen cassette pre-sized for the opening dimensions that you have provided.

The instructions are split into two sections: RECESS INSTALLATION, PAGE 2, and SURFACE INSTALLATION, PAGE 7. Determine which you need before starting.

The Milano can be made using different size and styled A-Screen Cassettes. The illustrations shown in these instructions are intended for instructional use.

PART DESIGNATIONS

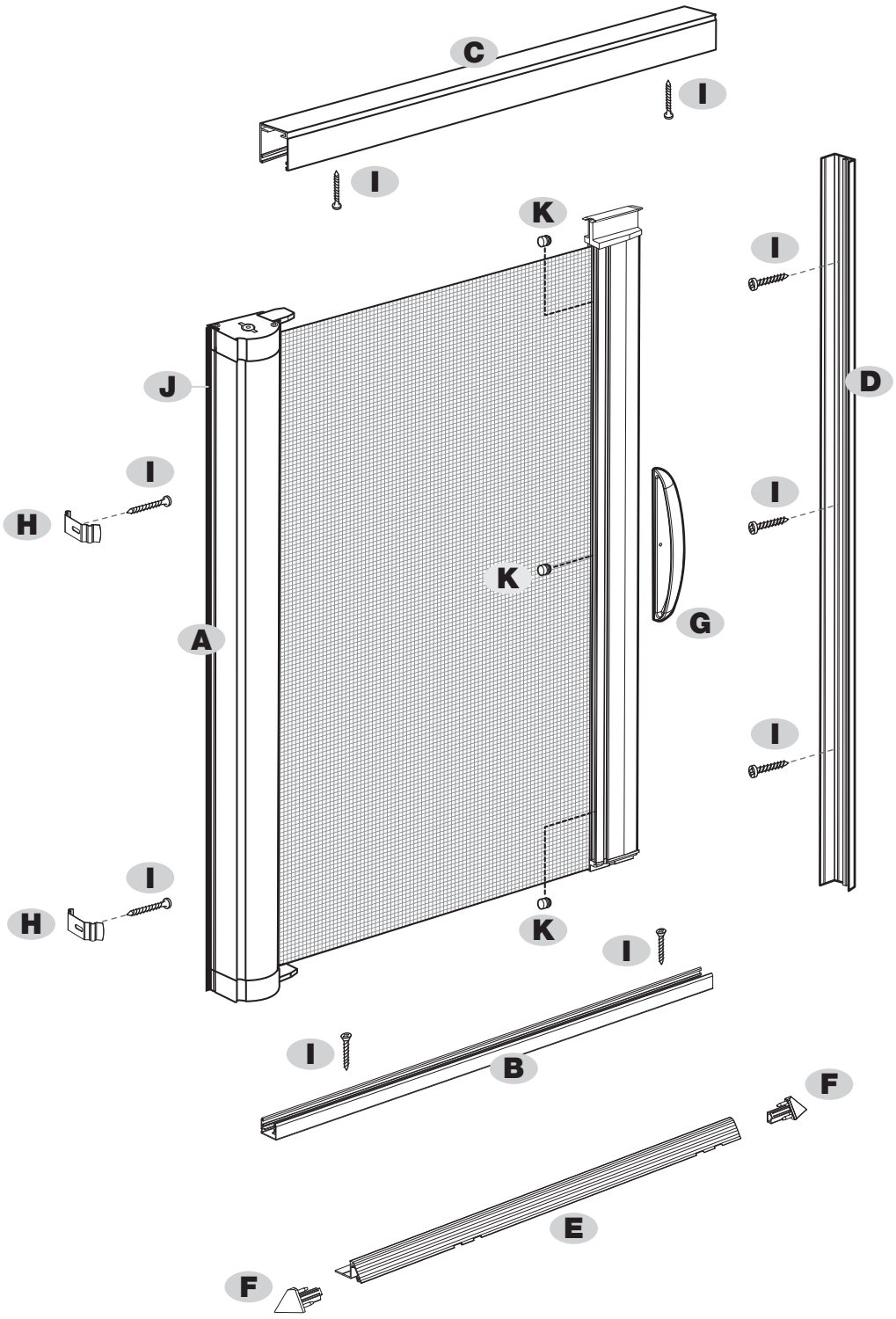

A Screen Cassette Assembly

B Bottom Guide Rail

C Top Guide Rail

D Dual-Mount Side Rail with Magnet

E Threshold Transition (optional, ordered separately)

F Threshold Transition End Caps (optional, ordered separately)

G Handle

H Recess Mount Clips

I #8 x 1"(25mm) Phillips Panhead Screws

J Pile / Weather Strip

K Rubber Bumpers

1 MOUNTING

The **A-Screen Cassette** will be mounted inside the door frame using **H-Recess Mounting Clips** and **I - #8 x 1"(25mm) Phillips Panhead Screws**.

1-A Recess Installation

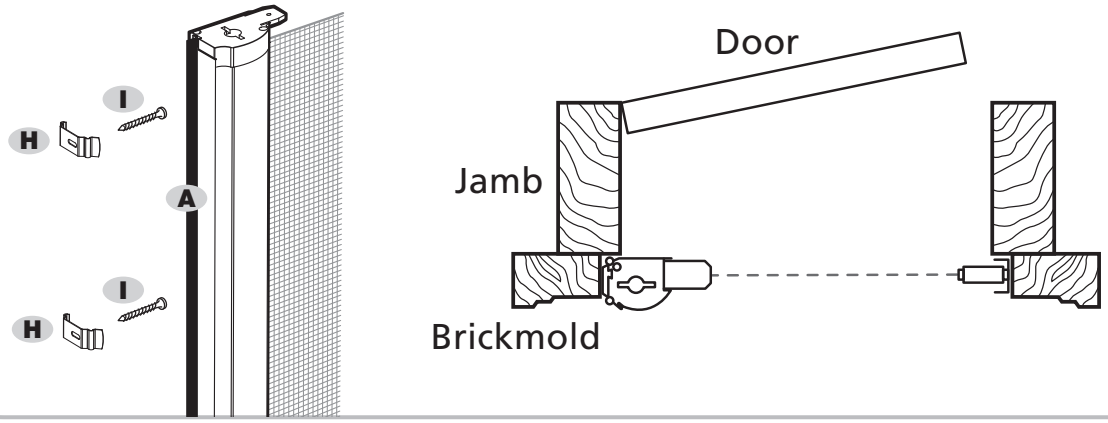

2 MEASURING

Measure the opening width and height in several places and record the smallest width and height measurement.

Recess Installation

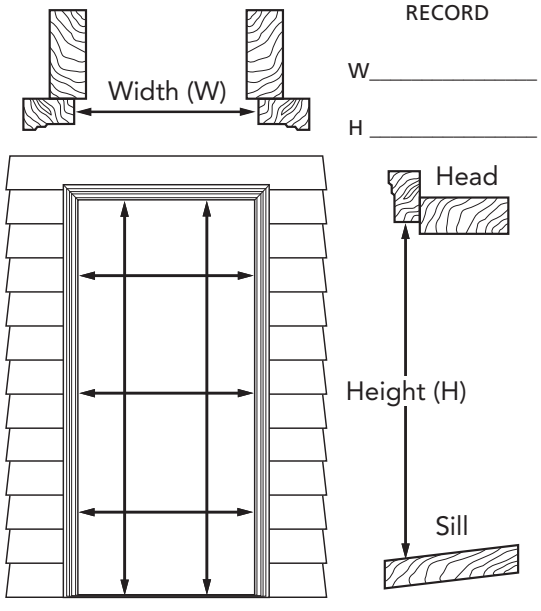

3.1

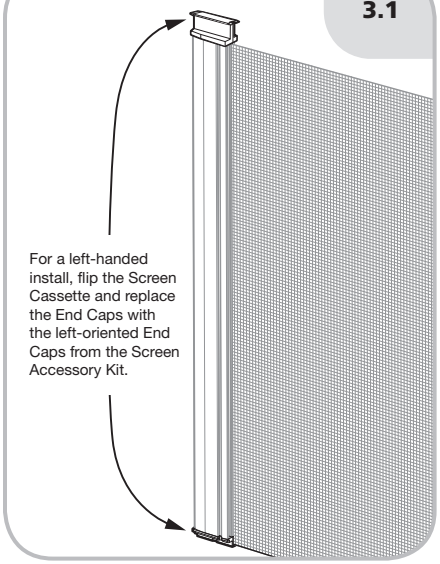

3 THE SCREEN CASSETTE

The **A-Screen Cassette Assembly** can be installed on either the right or left side of the door jamb. **The Screen Cassette** comes from the factory for right-handed installation. For a left-handed install, flip the **Screen Cassette** vertically, remove and discard the right-oriented **Pull Bar End Caps** and replace with the left-oriented **Pull Bar End Caps [3.1]** from the **Screen Accessory Kit**. Remember, for either orientation, the taller **Pull Bar End Cap** must always be at the top, and the rounded side of the **Cassette** should always face outwards.

4 INSTALLING THE CASSETTE

Using the **I-#8 x 1"(25mm) Phillips Panhead Screws**, install the **H-Recess Mounting Clips** 16" from the top and bottom of the door opening **[4.1]**. Lock the **Screen Cassette** onto the mounting clips **[4.2]**.

4.1 H-Clips for Recess Install

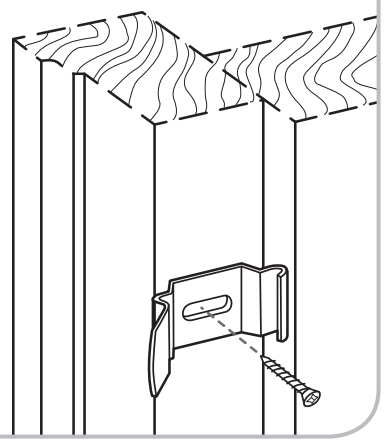

4.2 Recess Installation

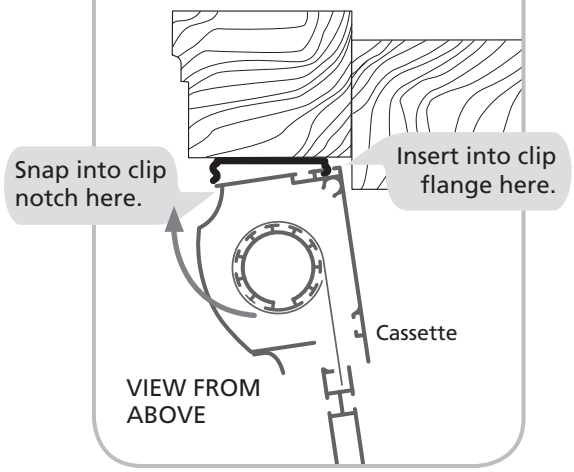

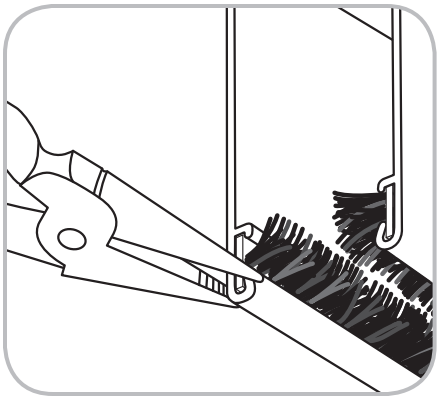

5 CRIMP WEATHER STRIPS

Crimp in the upraised channel lip on the inside of each corner of the **C-Top Guide Rail** to keep the **J-Pile/Weather Strip** from moving, as shown at left.

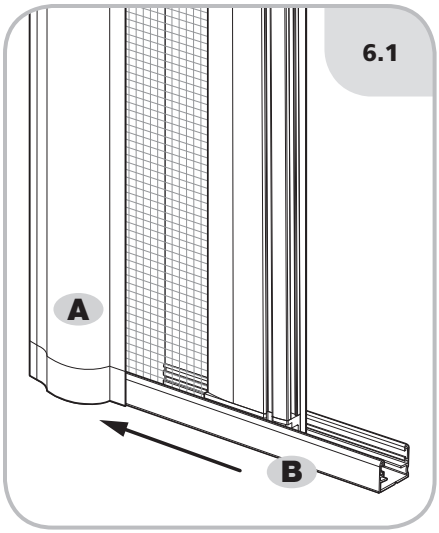

6 INSTALLING THE TOP AND BOTTOM GUIDE RAILS

Slide the **B-Bottom Guide Rail** fully onto the tab on the **A-Screen Cassette End Cap [6.1]**. Repeat for the **C-Top Guide Rail [6.2]**.

Position the **C-Top Guide Rail** onto the tab of the **A-Screen Cassette [6.2]**.

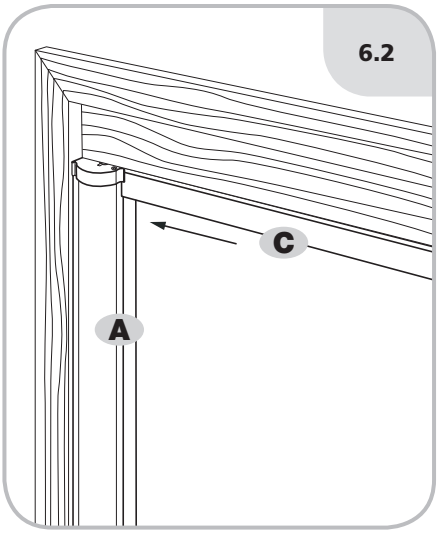

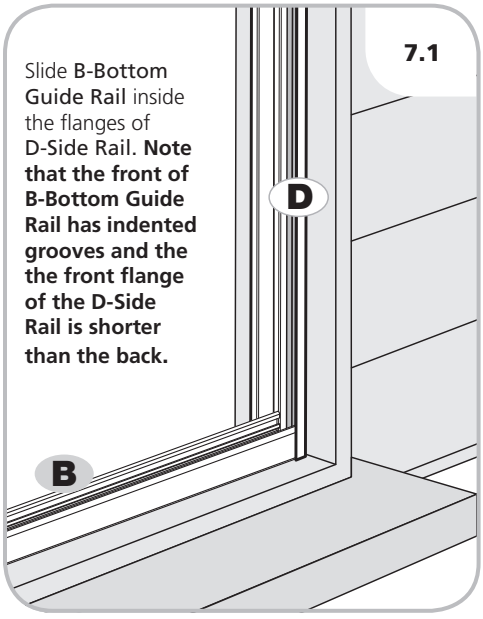

Slide **B-Bottom Guide Rail** inside the flanges of D-Side Rail. **Note that the front of B-Bottom Guide Rail has indented grooves and the the front flange of the D-Side Rail is shorter than the back.**

7 POSITION SIDE RAIL WITH MAGNET

Angle the **D-Side Rail with Magnet** behind and over the **B-Bottom Guide Rail**, so that the **B-Bottom Rail** is positioned inside the flanges of the **D-Side Rail [7.1].**

C-Top Guide Rail also positions inside the flanges of the **D-Side Rail [7.2]**.

On the recess install, the back of the **D-Side Rail** fits flush against the inside of the door jamb as shown, with the tallest flange of the **Side Rail** on the inside.

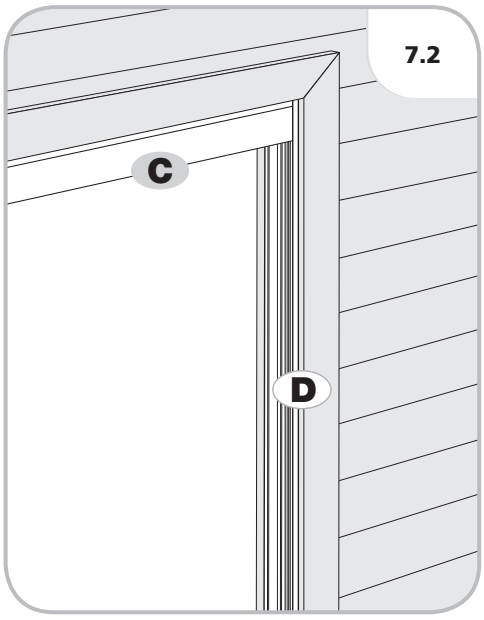

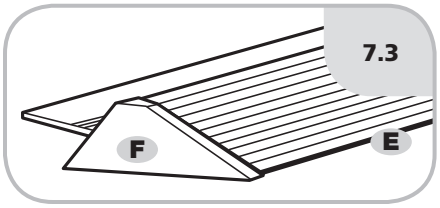

PROFILES OF BOTTOM GUIDE RAIL AND THRESHOLD TRANSITION

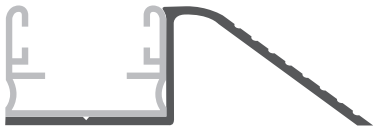

OPTIONAL THRESHOLD TRANSITION FOR RECESS MOUNT ONLY (ORDERED SEPARATELY)

Before screwing down the **B-Bottom Guide Rail**, you may choose to install the **E-Threshold Transition** (with **F-Threshold Transition End Caps) [7.3].** This part is optional; it protects the bottom guide rail and it is also a nice aesthetic feature. The **Transition** may be installed toward the interior or exterior of the home.

To install, cut the **Transition** to the door opening width, less 4-1/4"(114mm) for **Single Door Screens**. Insert the **F-Threshold Transition End Caps**, slide the lip of the **Transition** under the **Bottom Guide Rail** and secure both profiles with three (3) **I-#8 x 1"(25mm) Phillips Panhead Screws**. Position screws 6 inches in from each end and center the middle one.



8 SECURE THE RAILS WITH SCREWS

Secure the **B-Bottom Guide Rail, C-Top Guide Rail** and **D-Side Rail with Magnet** with three **I-#8 x 1"(25mm) Phillips Panhead Screws** each. Position screws 6 inches (150mm) in from each end and center the middle one.

When installing the **Bottom** and **Top Guide Rail**, use the convenient **Pile Opener** included with this kit, to temporarily separate the two insect piles. This will make for easier viewing and installation of the screws.

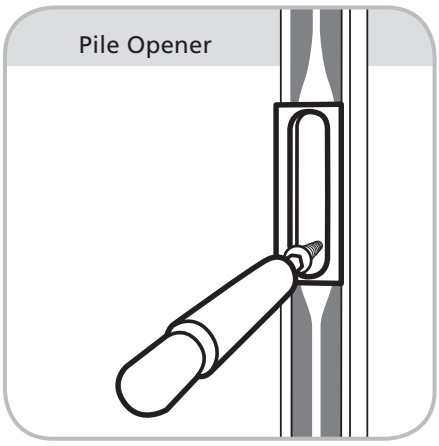

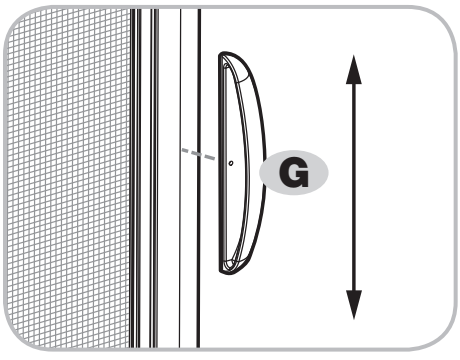

9 ADJUSTING THE HANDLES

Adjust the **G-Handle** heights by loosening the **Allen-Head Set Screw**, move the **G-Handle** as desired and retighten screw.

PART DESIGNATIONS

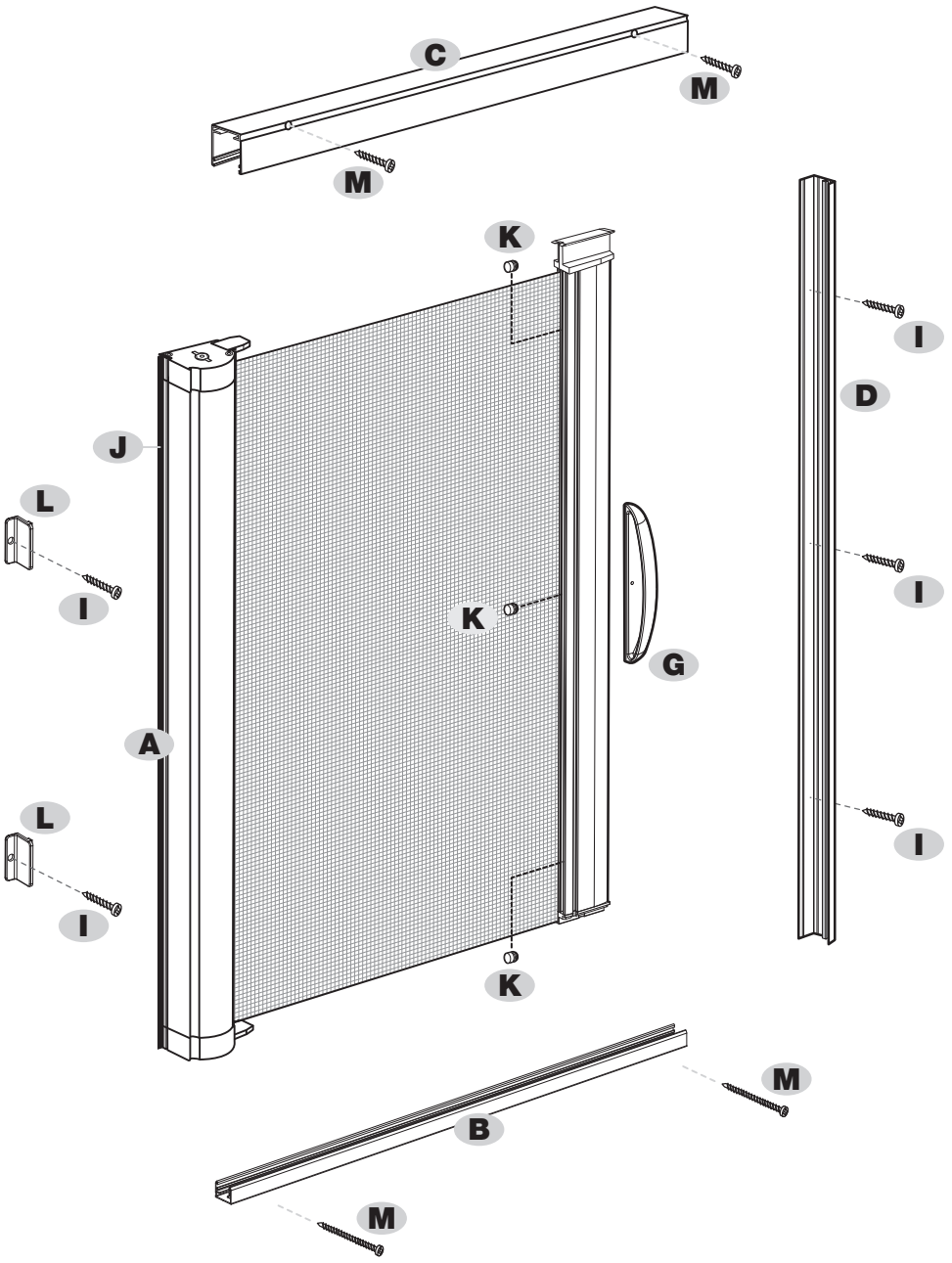

A Screen Cassette Assembly

B Bottom Guide Rail

C Top Guide Rail

D Dual-Mount Side Rail with Magnet

G Handle

I #8 x 1"(25mm) Phillips Panhead Screws

J Pile / Weather Strip

K Rubber Bumpers

L Surface Mount Clips

M 1/8”(3mm) x 1-3/4”(44mm) Surface Mount Screws

1 MOUNTING

Surface / Flush Mount the **A-Screen Cassette** using **L-Surface Mounting Clips** and **I - #8 x 1"(25mm) Phillips Panhead Screws**.

1-B Surface Installation

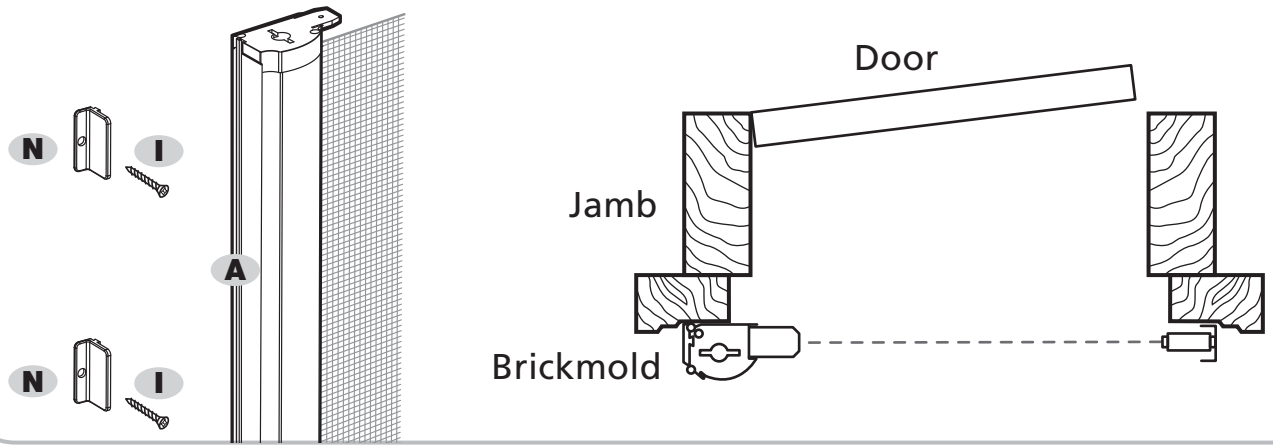

2 MEASURING

Measure the opening width and height in several places and record the smallest width and height measurement.

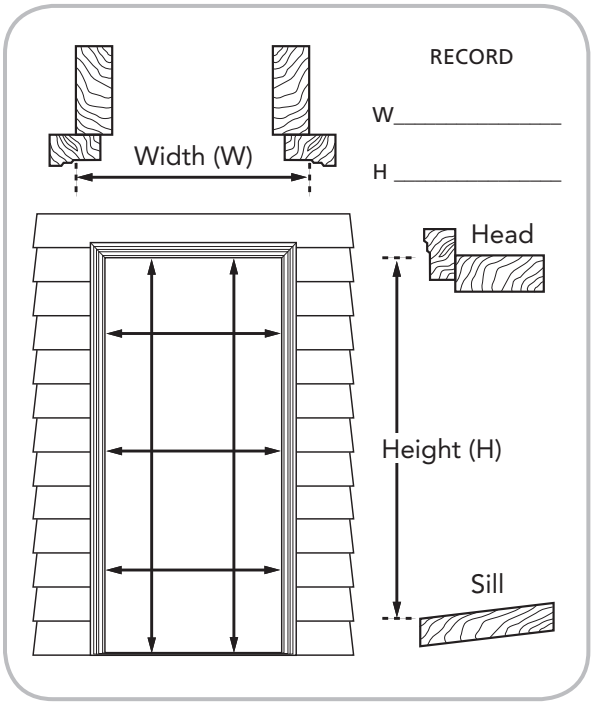

3.1

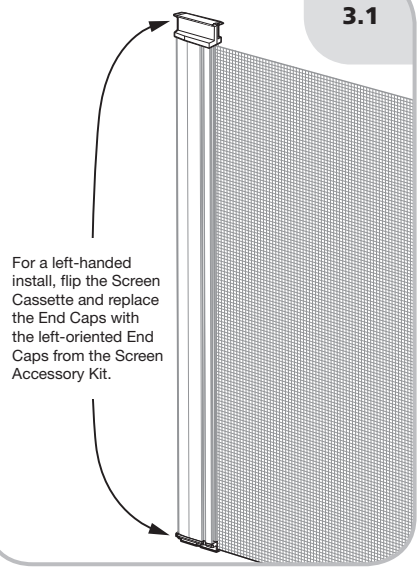

3 THE SCREEN CASSETTE

The **A-Screen Cassette Assembly** can be installed on either the right or left side of the door jamb. **The Screen Cassette** comes from the factory for right-handed installation. For a left-handed install, flip the **Screen Cassette** vertically, remove and discard the right-oriented **Pull Bar End Caps** and replace with the left-oriented **Pull Bar End Caps [3.1]** from the **Screen Accessory Kit**. Remember, for either orientation, the taller **Pull Bar End Cap** must always be at the top, and the rounded side of the **Cassette** should always face outwards.

4.1 L-Clips for Surface Install

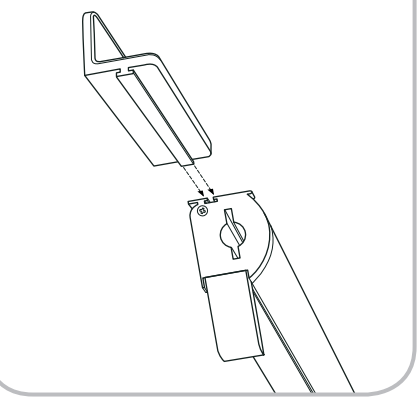

4.2 Surface Installation

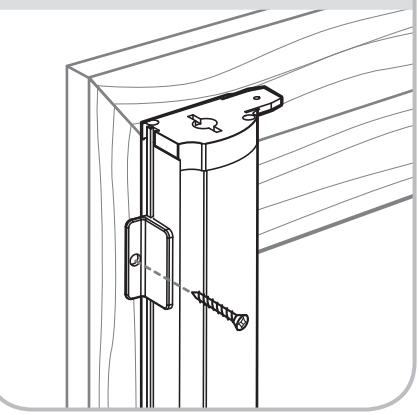

4 INSTALLING THE CASSETTE

Remove and discard the **P-Pile/Weather Strip** from the back of **A-Screen Cassette**. Slide two **L-Surface Mount Clips** into the groove on the rear of the **Screen Cassette** before proceeding **[4.1]**. Position the **Screen Cassette**, and use **I - #8 x 1"(25mm) Phillips Panhead Screws** to secure **L-Surface Mount Clips** to the opening **[4.2]**.

5 CUT THE TOP AND BOTTOM RAILS

Using the measurements from Step 2,

SUBTRACT 2-1/2"(63MM) FROM THE TOP GUIDE
SUBTRACT 2-1/4"(57MM) FROM THE BOTTOM GUIDE

Cut the rails to size.

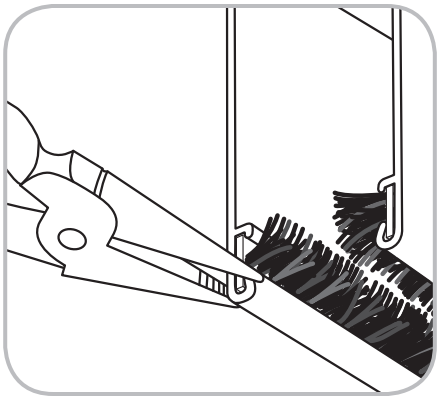

6 CRIMP WEATHER STRIPS

Crimp in the upraised channel lip on the inside of each corner of the to keep the **J-Pile / Weather Strip** from moving, as shown at left.

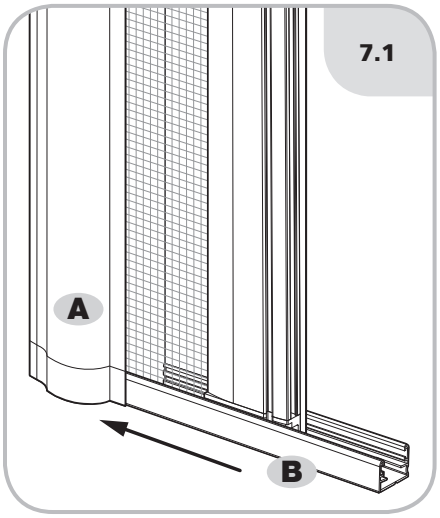

7 INSTALLING THE TOP AND BOTTOM GUIDE RAILS

Slide the **B-Bottom Guide Rail** fully onto the tab on the **A-Screen Cassette End Cap** [7.1].

NOTE: The Bottom and Top Rails each have decorative grooves on one side. This groove should face the outside [7.2].

Slide the **C-Top Guide Rail** onto the tab of the **A-Screen Cassette Assembly** [7.3].

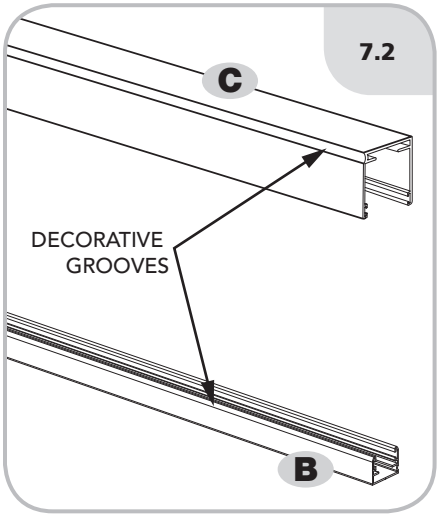

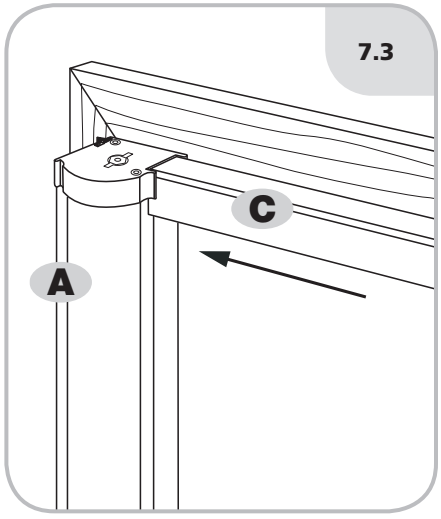

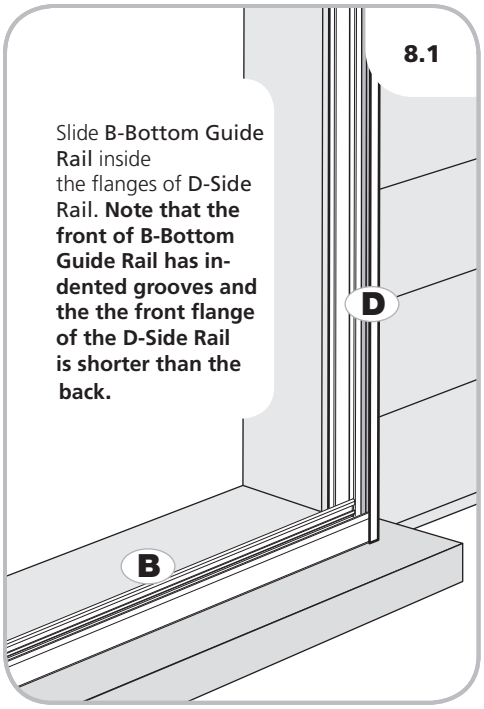

8 POSITION SIDE RAIL WITH MAGNET

Angle the **D-Side Rail with Magnet** behind and over the **B-Bottom Guide Rail**, so that the **B-Bottom Rail** is positioned inside the flanges of the **D-Side Rail [8.1].**

C-Top Guide Rail also positions inside the flanges of the **D-Side Rail [7.2]**. On the surface installation, the taller flange of the **D-Side Rail** is set flush to the outside of the door jamb.

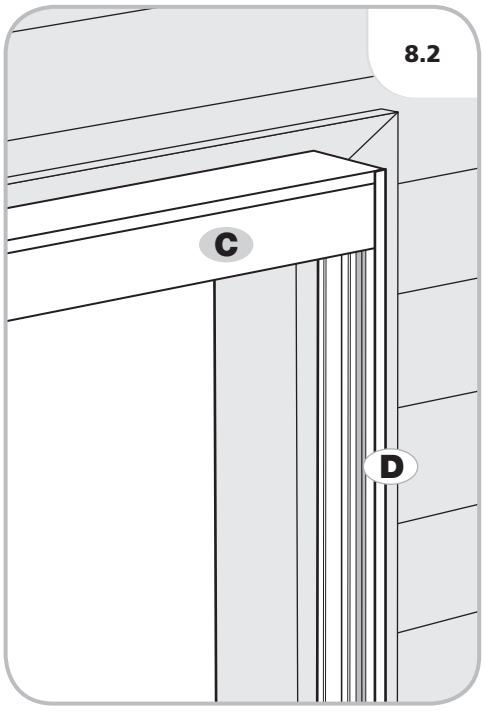

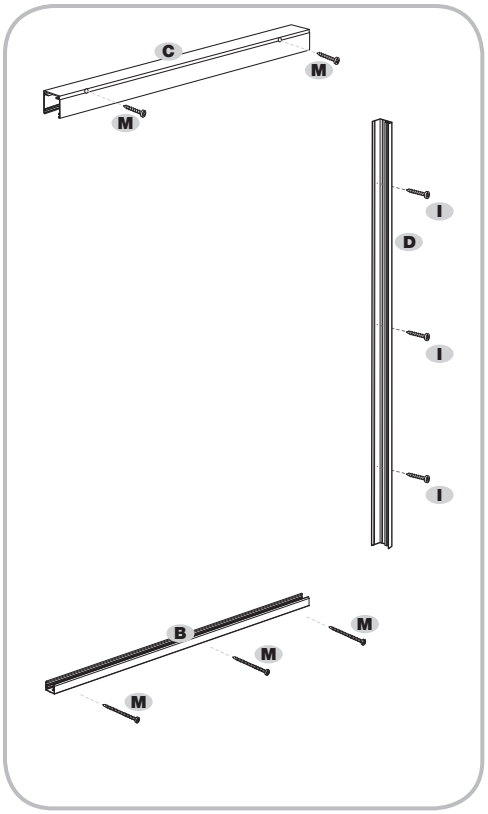

9 SECURE THE RAILS WITH SCREWS

C-Top Guide Rail Using the Decorative Trim Groove [7.2] as a guide, staying above the glide platforms inside the Top Guide Rail, drill 1/8" (3mm) holes at a location 4" in from each end and through both sides of the **Top Guide Rail**. Drill 2 holes for single screens. Secure the **Top Guide Rail** to the entry with M-1/8" (3mm) x 1-3/4" (44mm) **Surface Mount Screws**. Do not overtighten.

B-Bottom Guide Rail Using the **Decorative Trim Groove [7.2]** as a guide (staying underneath the glide platforms inside the **Bottom Guide Rail**), drill 1/8"(3mm) holes evenly spaced through both sides of the **Bottom Guide Rail**. Drill 3 holes for single screens. Secure the rail to the entry with M-**1/8"(3mm) x 1-3/4"(44mm) Surface Mount Screws**. Do not over tighten. If the **B-Bottom Guide Rail** will be positioned where it is susceptible to being stepped upon, kicked or otherwise bent, then add structural support for the **B-Bottom Guide Rail** to rest upon. A 1/2" x 1/2" "L" shaped aluminum extrusion is recommended. This or another support material may be purchased at a local hardware store.

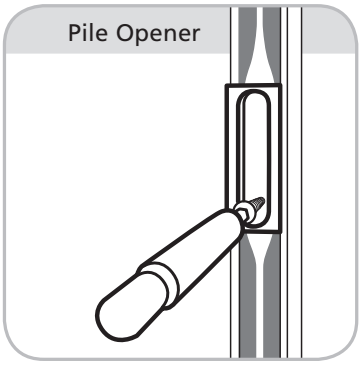

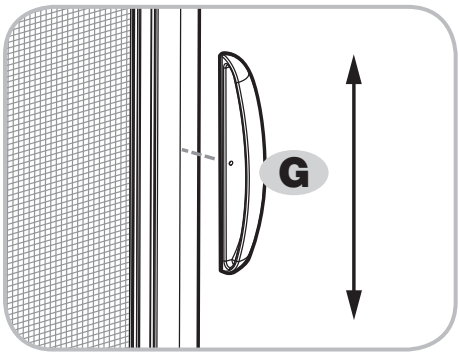

10 ADJUSTING THE HANDLES

Adjust the **G-Handle** heights by loosening the **Allen-Head Set Screw**, move the **G-Handle** as desired and retighten screw.

TROUBLESHOOTING GUIDE

THE DOOR'S BOTTOM THRESHOLD SLOPES STEEPLY:

- The **Bottom Guide** will not work properly installed at an angle. Use wedge shims to adjust the **Bottom Guide** until level.

SCREEN IS TORN OR DAMAGED:

- Replace the mesh using a **Screen Refill Kit**.

THE CLOSING MAGNETS DO NOT FULLY SEAL OR THE SCREEN DOES NOT CLOSE EVENLY:

- Clean the **Magnets** using mild soap and water.
- Clean any debris from inside the **Bottom Guide**. Debris can interfere with closing and smooth screen operation.
- Open the screen and check that the magnet that is located in the **Pull Bar** aligns with the magnetic strip in the **D-Dual-Mount Side Rail with Magnet**. To alter the alignment remove the **M-#8 x 1"(25mm) Phillips Panhead Screws** for the center of the **D-Dual-Mount Side Rail**. Flex the center of the **D-Dual-Mount Side Rail** 1/8" - 3/16" (3mm-4mm) toward the outside and then reinstall the **M-#8 x 1"(25mm) Phillips Panhead Screws.**

Genius® Retractable Screen Systems

? INSTALLATION QUESTIONS ? MISSING PARTS ? REPLACEMENT PARTS ?
CONTACT **GENIUS** @ 1.866.523.9511 TOLL FREE • GENIUSSCREENS.COM

SIZING DEDUCTIONS

Your Genius Milano retractable screen will arrive built to fit the net opening dimension that you provided. If adjustments are necessary the following are the required cutting deductions. Please note that all deductions should be made from the original net opening dimensions.

Cassette Style	Cassette Deduction	Pull Bar	30mm Rail	15mm Rail	Magnet Profile
36mm Milano Single Door Cassette	11/16"	2-3/16"	1-3/4"	1-3/4"	0"
41mm Milano Single Door Cassette	11/16"	2-3/16"	2-1/8"	2-1/8"	0"
42mm Milano Single Door Cassette	11/16"	2-3/16"	2-5/16"	2-5/16"	0"

Genius®
Retractable Screen Systems

INSTALLATION BULLETIN
for THRESHOLD/SILL APPLICATIONS

There are multitudes of door threshold/sill designs and these must be considered before you install your **Retractable Screen**. For a proper installation it is important to have or create a level and stable surface for mounting the bottom guide of the retractable screen.

Before beginning, identify the exact location where the **Screen Cassette** will be installed, because this will influence the position of the **Bottom Guide**.

The following are some of the more typical threshold/sill designs and solutions for dealing with these instances.

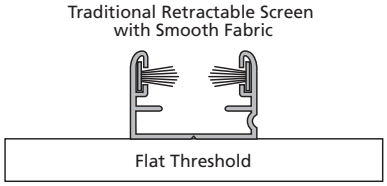

A1 FLAT THRESHOLD/SILL for TRADITIONAL SCREEN

INSTRUCTIONS: Clean the surface and then mount the **Retractable Screen Bottom Guide** directly to the threshold/sill.

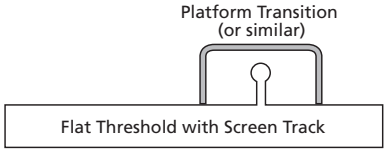

B1 FLAT THRESHOLD/SILL with SCREEN TRACK

INSTRUCTIONS: To span over an existing screen track and make a flat and stable surface, install material such as the **Genius "Platform Transition" [Part #: 01-12360-X-X]**. Most hardware stores also sell shim materieals or various shaped aluminum trims that will give the same result.

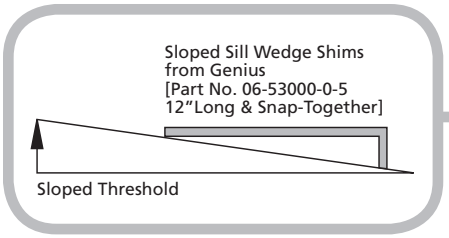

C1 SLOPED THRESHOLD/SILL for TRADITIONAL SCREENS

INSTRUCTIONS: For all other retractable screen styles you will need to make a flat and stable surface by installing shim material using the **Genius Sloped Sill Wedge Shims [Part #: 06-53000-0-5] [C2].**

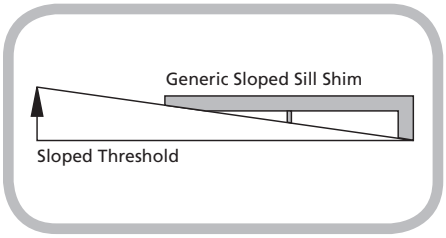

C2 Also, most hardware stores also sell an "L" shaped aluminum trim that works nicely for this purpose **[C3]**.

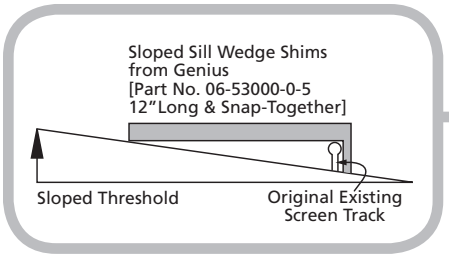

D1 SLOPED THRESHOLD/SILL with SCREEN TRACK

INSTRUCTIONS: To span over an existing screen track and, make a flat and stable surface, install shim material such as the threshold/sill using the **Genius Sloped Sill Wedge Shims [Part #: 06-53000-0-5] [D1]**.

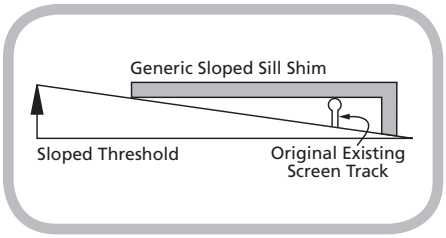

D2 Most hardware stores also sell a flat stock or an "L" shaped aluminum trim that works nicely for this purpose [D2].

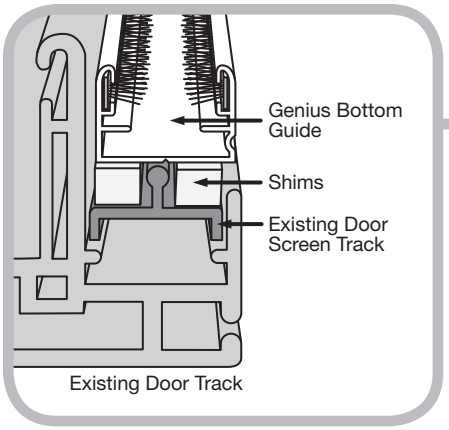

E1 SLIDING PATIO DOOR THRESHOLDS with SCREEN TRACK

INSTRUCTIONS: Many Patio Doors have a **Screen Track [E1]** that will now be obselete with the installation of your Retractable Screen. For all Genius smooth screen fabric systems (non-pleated screens), there are instances where resting the **Bottom Guide** above the existing screen track is the desirable method. If needed, add shims to create a stable, level surface for mounting the **Guide**.

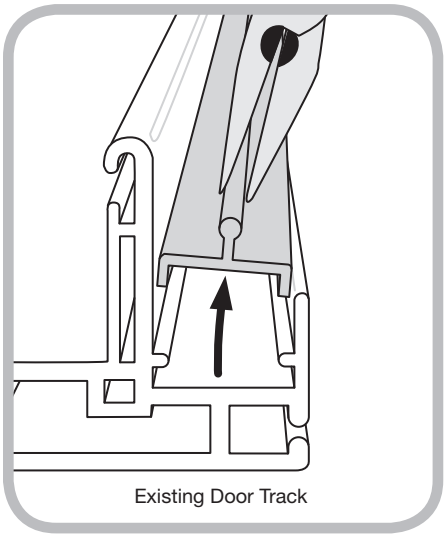

E2 If however, the existing door's Screen Track is removable, take out the Track by hand or with any type of pliers **[E2]**.

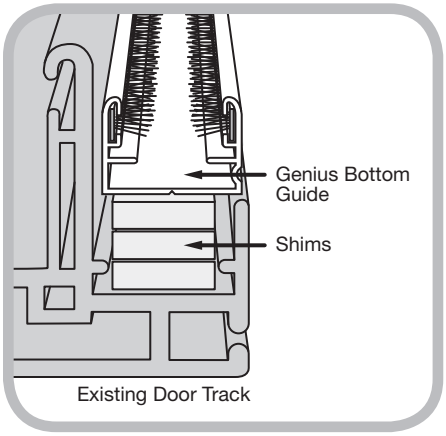

E3 Then add non-degradable shim material (plastic, nylon or similar) **[E3]** so that you create a flat and stable surface for the Retractable Screen Bottom Guide Rail.

Note: Pleated style screens require the use of the **Genius Sheer Screen Surface Mount Kit**. See Installation Bulletin - Sheer Screen Surface Mount Kit.

Genius®
Retractable Screen Systems

INSTALLATION BULLETIN
for TOP AND SIDE GUIDE RAILS

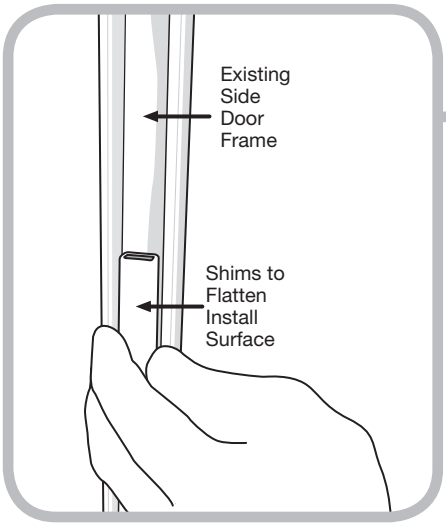

A1 EXISTING SIDE RAIL PREPARATION with SHIMS

INSTRUCTIONS: Since there are multitudes of door master frame designs, all surfaces where you will be mounting the screen must be considered before you install the retractable screen.

In the case of the side rails, again, existing door frames may have multiple channels, or flanges of different heights, that make for a surface too uneven for efficient installation of your new screen. In this case, you will need to shim this channel or channels to the height of the tallest flange in the existing side door frame. It is recommended you order or find shims made of a non-degradable material (plastic or nylon, for example) that can be fitted into the channel(s), of sufficient length to assure a flat and vertically plumb surface for the new side rail.