CONTOURE®

SPACE SAVER APPLIANCES

MID-SIZE BUILT-IN MICROWAVE OVEN



INSTRUCTION MANUAL MODEL(S):

RV-985BK - Deluxe Black

RV-900S - Deluxe Stainless Steel

Before using your appliance, please read this manual carefully & keep it for future reference. The design and specifications are subject to change without prior notice for product improvement

THANK YOU FOR CHOOSING **TO BUY A CONTOURE® PRODUCT**

Cooking with CONTOURE®

PLEASE REGISTER AS A CONTOURE® OWNER!

To help ensure you receive prompt and efficient service, please register your new CONTOURE® product. By completing your product registration, you are protecting your new investment and obtaining important warranty service information unique to your product. Please maintain your original proof of purchase for product and warranty service.

REGISTRATION IS EASY - THE DETAILS:

Online: To register your product visit our website **www.contoureusa.com** Under the "SUPPORT" tab you will find a link to the product registration page where you can complete a digital registration form.

A FEW **SMALLER DETAILS:**

If you have any questions about your new CONTOURE® product, please reach out to us directly via e-mail [**info@contoureusa.com**] or call our Customer Service Center directly. To submit a warranty claim or inquire about your product's warranty, please e-mail us [**warranty@contoureusa.com**].

THANK YOU FOR YOUR PURCHASE!

We guarantee that your new CONTOURE® product will perform to the highest quality standards that you rely on from the CONTOURE® brand.

Please do not hesitate to reach out to us if you need any assistance or have any questions about your new product.

Email [**support@contoureusa.com**] with your product Serial Number and details of where and when you purchased your product.

SIGN UP & SAVE

Find out first by joining our mailing list **www.contoureusa.com** Promotions, new products and sales directly to your inbox.

We value your business and hope you enjoy your new product!

©2026 BY CONTOURE USA

Table of Contents

Welcome & Congratulations 4

Important Safety & Precautions 5

Installation instructions 8

Operating Your Oven 16

Care & Maintenance 21

Troubleshooting Guide 23

Product Warranty 25

Welcome & Congratulations

Thank you for purchasing this quality CONTOURE® Built-in Microwave Oven.

Congratulations on your new deluxe cooking appliance.

For your safety and full enjoyment of this product, always read the instruction book carefully before using.

Don't forget to register your product at **www.contoureusa.com** for updates and other relevant information.

This manual contains important information on the installation, use, and care of your appliance. Please read this manual carefully before installation and operation of this machine to prevent injury and property damage and to take full advantage of your new microwave oven's benefits and features.

Important Safety & Precautions

What you need to know about Safety Instructions:

Warnings and Important SafetyInstructions in this manual DO NOT cover all possible conditions and situations that may occur. It is your responsibility to use common sense, caution and care when installing, maintaining and operating this appliance.

Important Safety Symbols & Precaution Warnings:

⚠ WARNING

This symbol indicates that hazards or unsafe practices may cause serious personal injury or death. To reduce the risk of fire, explosion, electric shock, or personal injury when using your appliance, these basic safety precautions MUST be followed. These warnings are to prevent injury to you and to others, please follow them explicitly. After reading this section, keep it in a safe place for future reference.

State of California Proposition 65 Warnings:

⚠ WARNING

The California Safe Drinking Water and Toxic Enforcement Act requires the Governor of California to publish a list of substances known to the State of California to cause cancer, birth defects, or other reproductive harm, and requires the business to warn of potential exposure to such substances. This product contains a chemical known to the State of California to cause cancer, birth defects, or other reproductive harm. This appliance can cause low-level exposure to some of the substances listed, including benzene, formaldehyde, and carbon monoxide.

⚠ WARNING ⚠

Risk of fire or electric shock
To reduce the risk of fire, electrical shock, burns or injury or exposure to excessive microwave energy when using this appliance follow basic precautions.

Important Safety & Precautions

⚠ WARNING

To reduce the risk of fire, electric shock, burns or injury to people when using the appliance, follow basic precautions, including the following:

- Read all instructions before using this appliance.
- Read and follow the specific warning: PRECAUTIONS TO AVOID POSSIBLE EXPOSURE TO EXCESSIVE MICROWAVE ENERGY
- This appliance must be grounded. connect only to properly grounded outlet. See Grounding instructions.
- Some products such as whole eggs and sealed containers (for example, closed glass jars) can explode and should NOT be heated in this appliance.
- DO NOT use corrosive chemicals or vapors in this appliance.
- Use this appliance only for its intended use as described in this manual.
- This oven is specifically designed to heat or cook food.It is not designed forindustrial or laboratory use.
- HOT CONTENTS CAN CAUSE SEVERE BURNS. DO NOT ALLOW CHILDREN TO USE THE MICROWAVE. Use caution when removing hot items.
- DO NOT operate this appliance if it has a damaged cord or plug, if it is not working properly or if it has been damaged or dropped.
- This appliance should be serviced only by qualified service technicians.
- DO NOT cover or block any openings on the appliance
- DO NOT store or use this appliance outdoors.
- DO NOT use this product near water, for example, near a kitchen sink, in a wet basement, near a swimming pool, or similar ocation.
- DO NOT immerse cord or plug in water.
- Keep cord away from heated surfaces.
- DO NOT let cord hang over edge(s) of tables, or countertops.
- When cleaning surfaces of door and oven that come together on closing the door, only use mild, nonabrasive soaps or detergents applied with a sponge or soft cloth.

⚠ WARNING

Keep ventilation openings, in the appliance enclosure or in the built-in structure clear of obstruction(s).

⚠ WARNING

Do not use mechanical devices or other means to accelerate the defrosting process, other than those recommended by the manufacturer.

⚠ WARNING

Any electrical components (plug, power cord, etc) must be replaced by a certified service agent or qualified service technician.

⚠ WARNING

To reduce the risk of fire to the oven interior:

- DO NOT overcook food.
- Carefully attend to the appliance when paper, plastic or other combustible materials are placed inside the oven to facilitate cooking.
- Remove the wire twist-ties from paper or plastic bags before placing bag in oven.
- If materials inside the oven ignite, keep oven door closed, turn oven off, and disconnect the power cord,or shut off power at the fuse or circuit breaker panel.
- DO NOT use the interior for storage purposes.
- DO NOT leave paper products, cooking utensils or food in the oven when not in use.
- Visible bubbling or boiling when the container is removed from the microwave is not always present. This could result in very hot liquids suddenly boiling over when the container is disturbed or a utensil is inserted into the liquid.

⚠ WARNING

To reduce the risk of injury to person(s):

- DO NOT use straight-sided containers with narrow necks.Use wide-mouth containers.
- Stir liquid both before and halfway through heating it.
- DO NOT overheat liquid.
- Use extreme care when inserting a spoon or other utensils into the container. This may also cause delayed eruptive boiling.
- After heating, allow the container to stand in the microwave oven for at least 20-seconds before removing the container.
- Touching some of the internal components can cause serious personal injury or death.
- DO NOT disassemble this appliance.
- DO NOT use an extension cord with this appliance.Ifthe power cord is too short, have a qualified electrician install an outlet near the appliance.Use of an extension cord can negatively affect the unit's performance.

⚠ WARNING

Liquids such as water, coffee or tea can be overheated beyond the boiling point without appearing to be boiling. This is called delayed eruptive boiling.

⚠ WARNING

It is hazardous for anyone other than authorized service personnel to carry out service or repairs involving the removal of covers.

⚠ WARNING

To avoid the risk of an electrical shock do not attempt repairs yourself.

Installation Instructions

Grunding instrctions

This appliance must be grounded. In the event of an electrical short circuit, grounding reduces the risk of electric shock by providing an escape wire for the electric current. This appliance is equipped with a cord having a grounding wire with a grounding plug. The plug must be plugged into an outlet that is properly installed and grounded.

⚠ WARNING

Improper use of the grounding can result in a risk of electric shock. Consult a qualified electrician or serviceman if the grounding instructions are not completely understood, or if doubt exists as to whether the appliance is properly grounded. If it is necessary to use an extension cord, use only a 3-wire extension cord that has a 3-blade grounded plug, and 3-slot receptacle that will accept the plug on the appliance. The marked rating of the extension cord shall be equal to or greater than the electrical rating of the appliance.

⚠ DANGER

Electric Shock Hazard

Touching some of the internal components can cause serious personal injury or death. Do not disassemble this appliance.

⚠ WARNING

Electric Shock Hazard

Improper use of the grounding can result in electric shock. Do not plug into an outlet until appliance is properly installed and grounded.

1. A short power-supply cord is provided to reduce the risks resulting from becoming entangled in or tripping over a longer cord.
2. Longer cord sets or extension cords are available and may be used if care is exercised in their use.
3. If a long cord or extension cord is used:
   1) The marked electrical rating of the cord set or extension cord should be at least as great as the electrical rating of the appliance.
   2) The extension cord must be a grounding-type 3-wire cord.
   3) The longer cord should be arranged so that it will not drape over the counter top or tabletop where it can be pulled on by children or tripped over unintentionally.

Radio Interference

1. Operation of the microwave oven may cause interference to your radio, TV or similar equipment.

2. When there is interference, it may be reduced or eliminated by taking the following measures:
   1) Clean door and sealing surface of the oven.
   2) Reorient the receiving antenna of radio or television.
   3) Relocate the microwave oven with respect to the receiver.
   4) Move the microwave oven away from the receiver.
   5) Plug the microwave oven into a different outlet so that microwave oven and receiver are on different branch circuits.

3. This equipment generates, uses and can radiate radio frequency energy and, if not installed and used in accordance with the instructions, may cause harmful interference to radio communications. However, there is no guarantee that interference will not occur in a particular installation. If this equipment does cause harmful interference to radio or television reception, which can be determined by turning the equipment off and on, the user is encouraged to try to correct the interference by one or more of the following measures:
   1) Reorient or relocate the receiving antenna.
   2) Increase the separation between the equipment and receiver.
   3) Connect the equipment into an outlet on a circuit different from that to which the receiver is connected.
   4) Consult the dealer or an experienced radio/TV technician for help.)

This device complies with part 18 of the FCC Rules.

⚠ CAUTION

Personal Injury Hazard

Tightly-closed utensils could explode. Closed containers should be opened and plastic pouches should be pierced before cooking. See the instructions on "Materials you can use in microwave oven or to be avoided in microwave oven."
There may be certain non-metallic utensils that are not safe to use for microwaving. If in doubt, you can test the utensil in question following the procedure below.

Utensil Test:

1. Fill a microwave-safe container with 1 cup of cold water (250ml) along with the utensil in question.
2. Cook on maximum power for 1 minute.
3. Carefully feel the utensil. If the empty utensil is warm, do not use it for microwave cooking.
4. Do not exceed 1 minute cooking time.

Materials you can use in microwave oven

Utensils	Remarks
Browning dish	Follow manufacturer's instructions. The bottom of browning dish must be at least 3/16 inch (5mm) above the turntable. Incorrect usage may cause the turntable to break.
Dinnerware	Microwave-safe only. Follow manufacturer's instructions. Do not use cracked or chipped dishes.
Glass jars	Always remove lid. Use only to heat food until just warm. Most glass jars are not heat resistant and may break.
Glassware	Heat-resistant oven glassware only. Make sure there is no metallic trim. Do not use cracked or chipped dishes.
Oven cooking bags	Follow manufacturer's instructions. Do not close with metal tie. Make slits to allow steam to escape.
Paper plates and cups	Use for short–term cooking/warming only. Do not leave oven unattended while cooking.
Paper towels	Use to cover food for reheating and absorbing fat. Use with supervision for a short-term cooking only.
Parchment paper	Use as a cover to prevent splattering or a wrap for steaming.
Plastic	Microwave-safe only. Follow the manufacturer's instructions. Should be labeled "Microwave Safe". Some plastic containers soften, as the food inside gets hot. "Boiling bags" and tightly closed plastic bags should be slit, pierced or vented as directed by package.
Plastic wrap	Microwave-safe only. Use to cover food during cooking to retain moisture. Do not allow plastic wrap to touch food.
Thermometers	Microwave-safe only (meat and candy thermometers).
Wax paper	Use as a cover to prevent splattering and retain moisture.

Materials to be avoided in microwave oven

Utensils	Remarks
Aluminum tray	May cause arcing. Transfer food into microwave-safe dish.
Food carton with metal handle	May cause arcing. Transfer food into microwave-safe dish.
Metal or metal-trimmed utensils	Metal shields the food from microwave energy. Metal trim may cause arcing.
Metal twist ties	May cause arcing and could cause a fire in the oven.
Paper bags	May cause a fire in the oven.
Plastic foam	Plastic foam may melt or contaminate the liquid inside when exposed to high temperature.
Wood	Wood will dry out when used in the microwave oven and may split or crack.

Installation Instructions

Setting Up Your Oven:

(In case of any differences between the appliance and the pictures in this manual, the product shall prevail.) Remove the oven and all materials from the carton and oven cavity.
Your oven comes with the following accessories:

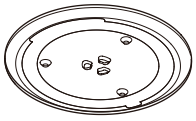

Glass Tray



Turntable Ring Assembly

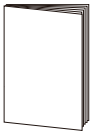

Instruction Manual

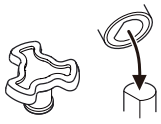

Turntable Shaft

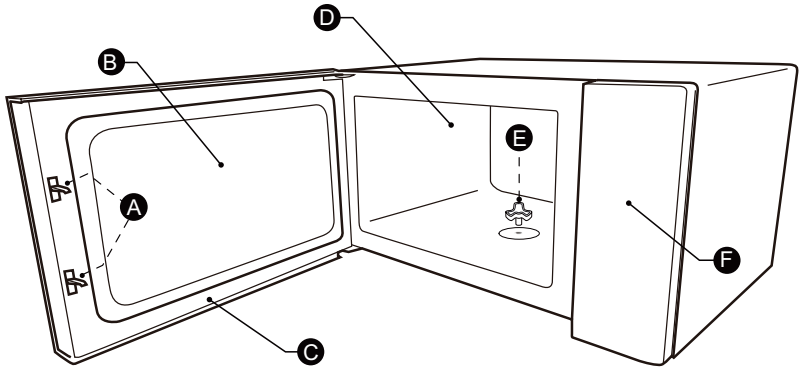

A) Safety interlock system
B) Observation window
C) Door assembly
D) Oven cavity
E) Turntable shaft
F) Control panel

Optional Accessories

Built-In Installation Kit purchased separately.

Turntable Installation

Cleaning the cooking compartment and putting the turntable in place.

For new installations, make sure all packaging and shipping tape has been removed from the turntable shaft. Before using the appliance to prepare food for the first time, you will need to put the turntable in place correctly. You must clean the cooking compartment and accessories.

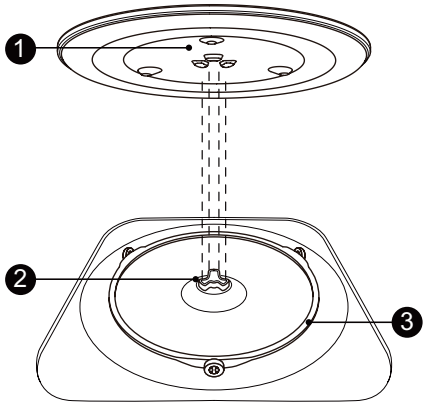

How to put the turntable in place:

1. Place the turntable ring assembly ③ into the recess in the cooking compartment.
2. Place the glass tray ① on the turntable ring assembly ③ . Fit the raised, curved lines in the center of the glass tray bottom between the three spokes of the shaft. Make sure that the glass tray ① engages in the turntable shaft ② in the centre of the cooking compartment floor. The rollers on the shaft should fit inside the turntable bottom ridge.

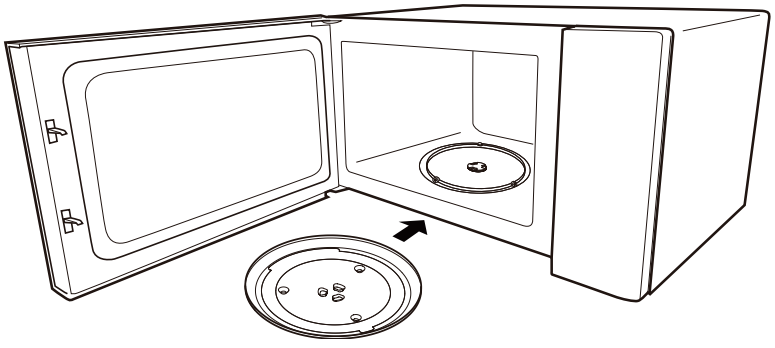

NOTES:

1. Never use the appliance without the turntable. Make sure that it is properly engaged. The turntable can turn clockwise or anti-clockwise.
2. Never place the glass tray upside down. The glass tray should never be restricted.
3. Both glass tray and turntable ring assembly must always be used during cooking.
4. All food and containers of food are always placed on the glass tray for cooking.
5. Never restrict the movement of the turntable.
6. If glass tray or turntable ring assembly cracks or breaks, contact your nearest authorized service center.

Control Panel

Please reference the diagram below to help understand the features and functions on the control.



1. Time Cook
2. Time Defrost
3. Weight Defrost
4. Power
5. Door Open
6. Timer/Clock
7. Auto Menus:
   • Popcorn • Potato • Pizza
   • Frozen Vegetable
   • Beverage • Dinner Plate
8. Number Buttons: 0-9
9. Stop / Cancel (Clears All Previous Settings During Cooking: Press Once to Stop Oven; Press Twice to Stop and Clear All Entries)
10. Memory Function
11. Start / +30 Seconds

Hold 3 Sec.

Operating Your Oven

Using the Safety Lock

The Safety Lock system is designed to prevent accidental oven activation, offering an essential layer of protection for child safety.

When you start cooking, the safety lock automatically activates, securing the door. This lock also engages if the door stays unlocked for 30 minutes after cooking ends. By default, the safety lock is always on, ensuring your kitchen remains safe. You have the option to turn it off if needed manually. Plus, the oven remembers your safety lock setting in case of a power outage, keeping it turned on or off according to your last selection.

Unlocking the Door

To ensure your safety while operating the appliance, quickly press the **DOOR OPEN** button during use and open the door within 10 seconds to prevent the safety lock from reactivating. The door will remain unlocked only until you start another cooking session.

Alternatively, to manually deactivate the door lock and enter standby mode, press **DOOR OPEN** within 30 minutes after your cooking session ends. Should no buttons be pressed within this timeframe, the safety lock will automatically release after 30 minutes, ensuring easy access and added convenience.

How to Disable the Safety Lock Feature

Should your household not include children, you can permanently disable the safety lock feature for convenience. Here's a streamlined guide to deactivate this function:

1. Sequentially press the buttons "7" followed by "9".
2. Within 30 seconds of the above step, firmly press and hold the **DOOR OPEN** button for three seconds.
3. Upon successful deactivation, the display will show "ULoc," confirming that the safety lock has been disabled.

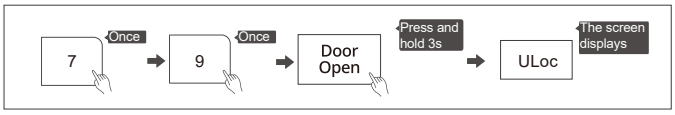

This quick and safe process ensures that your device is tailored to suit the safety requirements of your living environment, enhancing ease of use.

Setting the Clock

(1) Press **Timer/ Clock** twice, the screen will display "00:00".

(2) Press the number keys to enter the current time.
For example, time is 12:10 now, please press "1,2,1,0" in turn.

(3) Press **Timer/ Clock** to confirm. The clock is set.

NOTES:

(1) To reset the clock, please repeat step 1 to step 3.

(2) The clock is a 12-hour display. If the clock is not set, it will not work when powered.

Setting the Kitchen Timer

(1) Press **Timer/ Clock** once, the screen will display “00:00”.

(2) Press the number keys to set the desired time. The maximum time value is “99:99”.

(3) Press **Start** (Add +30 Sec.) to confirm. The timer starts counting down.

NOTE: The kitchen timer is a timer.

Microwave Cooking

11 power levels are available.

Level	10	9	8	7	6	5	4	3	2	1	0
Power	100%	90%	80%	70%	60%	50%	40%	30%	20%	10%	0%
Display	PL10	PL9	PL8	PL7	PL6	PL5	PL4	PL3	PL2	PL1	PL0

(1) Press **Time Cook** once, the screen will display "00:00".

(2) Press the number keys to set the cooking time. The maximum time value is “99:99”.

(3) Press **Power** once, and "PL10" will display. Then press the number keys to set the power level. The 11 power levels are available.

(4) Press **Start** (Add +30 Sec.) to start cooking.

Example: To cook the food with 50% microwave power for 15 minutes.

a. Press **Time Cook** once. "00:00" displays.

b. Press "1", "5", "0", and "0" in order.

c. Press **Power** once, then press "5" to select 50% microwave power.

d. Press **Start** (Add +30 Sec.) to start cooking.

NOTES:

(1) Opening the oven door or pressing **Stop** (Hold 3 Sec.) during operation will interrupt the current mode.

(2) If "PL0" is selected, the oven will work with a fan for no power. You can use this level to remove the odor of the oven.

(3) The power level can be changed during operation. Press **Power** once and then the current power will display for 3 seconds. Press the number keys to change the power. The oven will work with the selected power.

Speedy Cooking

(1) In standby mode, pressing the number keys 1 to 6 lets you quickly select a cooking time from 1 to 6 minutes. Then you can press **Start** (Add +30 Sec.) to increase the cooking time. The maximum time value is “99:99”.

(2) In standby mode, press **Start** (Add +30 Sec.) to cook food at 100% power level for 30 seconds. Each press on the same key can increase 30 seconds and the maximum time value is “99:99”.

NOTE: In the cooking state and defrosting by time state, each more press on **Start** (Add +30 Sec.) can increase the cooking time by 30 seconds (except for defrosting by weight, the auto menu, and the first stage of multi-stage cooking).

Defrost by Weight

(1) Press **Weight Defrost** once, "dEF1" will display.

(2) Press the number keys to set the weight of the food. The range of weight is 4 to 100 Oz.

(3) Press **Start** (Add +30 Sec.) to start defrosting.

NOTE: The buzzer will sound to remind you to turn the food over during defrosting. If no operation, the oven will continue working.

Defrost by Time

(1) Press **Time Defrost** once and then the screen will display “dEF2”.

(2) Press the number keys to set the desired defrost time. The maximum time value is “99:99”.

(3) Press **Power** once, "PL3" will display. And then press the number keys to set the power level. (If you do not need to set the power level, skip this step.)

(4) Press **Start** (Add +30 Sec.) to start defrosting.

NOTES:

(1) The defrost power cannot be changed during defrosting.

(2) The buzzer will sound to remind you to turn the food over during defrosting. If no operation, the oven will continue working.

Multi-Stage Cooking

NOTES: (1) Two cooking stages can be set in multi-stage cooking.
(2) If you set the defrost function, it will work automatically in the first stage.
(3) The auto menu cannot be set as one of the multi-stage.

Example: Defrost food for 5 minutes and then cook with 80% microwave power for 7 minutes.

(1) Press **Time Defrost** once and then the screen will display “dEF2”.

(2) Press “5”, “0”, and “0” to set the desired defrost time to 5 minutes.

(3) Press **Time Cook** once and then press “7”, “0”, and “0” to set the cooking time.

(4) Press **Power** once and then “PL10” will display.

(5) Press “8” to set the power level to PL8.

(6) Press **Start** (Add +30 Sec.) to start cooking.

Auto menu

(1) Press the corresponding menu key repeatedly to select the weight of the food you want.
Example: Press **Pizza** once and then "4.0¯" displays.

(2) Press **Start** (Add +30 Sec.) to start cooking.

Auto menu chart

Menu	Weight	Display	Power
Popcorn	1.75Oz	1.75	PL10
	3.2Oz	3.2¯	
	3.5Oz	3.5¯	
Potato	1 (8Oz)	1	PL10
	2 (16Oz)	2	
	3 (24Oz)	3	
Pizza	4.0Oz	4.0¯	PL8
	8.0Oz	8.0¯	
	14.0Oz	14.0¯	
Frozen Vegetable	4.0Oz	4.0¯	PL10
	8.0Oz	8.0¯	
	16.0Oz	16.0¯	
Beveage	1 Cup (120ml)	1-	PL10
	2 Cup (240ml)	2-	
	3 Cup (360ml)	3-	
Dinner Plate	9.0Oz	9.0¯	PL10
	12.0Oz	12.0¯	
	18.0Oz	18.0¯	

Memory Function

You can save the settings for a dish in the memory and call it up again.

(1) Press **0** Memory repeatedly to select the memory 1-3 procedure.
"1", "2" and "3" will display in order.

(2) If the procedure has been set, press **Start** Add +30 Sec. to start working.
Otherwise, please continue to set.

(3) After finishing the setting, press **Start** Add +30 Sec. once to save the procedure.

Example: Set memory 2 (cook food with 80% microwave power for 3 minutes).

(1) In standby mode, press **0** Memory twice.

(2) Press **Time Cook** once and then press the number keys "3", "0", and "0" in order.

(3) Press **Power** once and then press the number key "8".

(4) Press **Start** Add +30 Sec. to save the setting and "2" will display.

NOTES:

(1) If the power is not cut off, the procedure will be saved all the time.
(2) The auto menu, the speedy cooking, and the kitchen timer cannot be set as a memory function.

Inquiring Function

(1) If the clock has been set, the current time will display for three seconds by pressing **Timer/ Clock** in the cooking state.

(2) In the microwave cooking state, press **Power** to inquire about the power level. It will display for three seconds.

Lock Function for Children

You can use this function to prevent children from accidentally turning the oven on.

To activate the lock:

In standby mode, press and hold **Stop** Hold 3 Sec. for three seconds. A beep sounds and " [ ] " will display.

To deactivate the lock:

In a locked state, press and hold **Stop** Hold 3 Sec. for three seconds. A beep sounds.

ECO Function

To enter ECO mode:

In standby mode, and the oven door is closed, press **Stop** Hold 3 Sec. once. The screen will turn off.

To cancel ECO mode:

In ECO mode, pressing any key, or opening the door will cancel it.

Mute mode

To activate the mute mode:

In standby mode, press and hold 8 for 3 seconds. A beep will sound and "OFF" will display. When you press the key, it does not make a sound.

To deactivate the mute mode:

In mute mode, press and hold 8 for 3 seconds. A beep will sound and "On" will display.

Care & Maintenance

Cleaning:

For hygienic reasons the appliance interior, including accessories, should be cleaned regularly.

⚠ WARNING

CAUTION: This appliance may NOT be connected during cleaning. Danger of electrical shock! Before cleaning switch the appliance off. NEVER clean the appliance with a steam cleaner. Moisture could accumulate in electrical components, causing danger of electrical shock! Hot vapors can lead to the damage of plastic parts. The appliance must be dry prior to plugging it back in.

- For best performance and for safety reasons, keep the oven clean inside and outside. Take special care to keep the inner door panel and oven free from food and grease build-up.
- DO NOT use any abrasive cleaners on the microwave. Wipe the microwave oven inside and out with a soft cloth and warm (not hot) mild detergent solution. Then rinse and wipe completely dry.
- Wipe splatters immediately with a wet paper towel, especially after cooking greasy foods like chicken or bacon.
- Clean your microwave oven weekly or more often, if needed.
- Keep the inside (cavity) of the oven clean. Food particles and spilled liquids can stick to the oven walls, causing the oven to work less efficiently.
- Wipe up spills immediately. Use a damp, clean cloth and mild soap. DO NOT use harsh detergents or abrasive cleaners.
- To help loosen baked-on food particles or liquids, heat 2-cups of water (add the juice of 1 lemon if you desire to keep the oven fresh smelling) in a 4-cup measuring glass at High power for 5-minutes or until boiling. Let stand in oven cavity for 1 to 2 minutes.
- Remove the glass turntable tray from the oven when cleaning the oven cavity or tray. To prevent the glass turntable from breaking, handle with care and do not put it in water immediately after cooking. Wash the turntable tray in warm sudsy water or in the dishwasher.
- Clean the outside surface of the microwave with soap and a clean damp cloth. Dry with a clean soft cloth. To prevent damage to the operating parts of the oven, do not let water seep into any vents or openings.
- If children are around, use extreme caution, this unit should NOT be accessible to child's play.
- Wash the oven door window with very mild soap an water. Be sure to use a soft clean cloth to avoid scratching.
- If steam accumulates inside or outside the oven door, wipe with a soft cloth. Steam can accumulate when operating the oven in high humidity and in no way indicates microwave leakage.
- Never operate the oven without food in the oven cavity; this can damage the magnetron tube or glass tray. You may wish to leave a cup of water standing inside the oven when it is not in use to prevent damage if the oven is accidentally turned on.

Keep Your Oven Clean:

Your oven was designed with an easy to sanitize stainless-steel interior.

- ONLY use mild, non-abrasive soaps or detergents with a soft cloth or sponge to clean the oven's surface and oven walls.
- DO NOT clean any part of this oven without unplugging the cord.
- DO NOT use commercial oven cleaner on any part of your microwave.
- DO NOT clean any part of this oven without unplugging the cord.
- DO NOT wash turntable immediately after cooking. Let it cool prior to placing it in water to prevent risk of breakage.
- DO NOT drop turntable and shaft or it can break.
- Make sure you carefully put the turntable and shaft back in the oven after cleaning.
- DO NOT operate the oven without the turntable, turntable shaft and the ring assembly properly in place.
- We recommend wiping down the control panel with a damp cloth and drying it thoroughly.

Troubleshooting Guide

First try the solutions suggested here prior to a service call.

Symptem	Possible Cause	Possible Remedy
Oven will not start	a. Electrical cord for oven is not plugged in. b. Door is open. c. Wrong operation is set.	a. Plug into the outlet. b. Close the door and try again. c. Check instructions.
Arcing or sparking	a. Materials to be avoided in microwave oven were used. b. The oven is operated when empty. c. Spilled food remains in the cavity.	a. Use microwave-safe cookware only. b. Do not operate with oven empty. c. Clean cavity with wet towel.
Unevenly cooked foods	a. Materials to be avoided in microwave oven were used. b. Food is not defrosted completely. c. Cooking time, power level is not suit ble. d. Food is not turned or stirred.	a. Use microwave-safe cookware only. b. Completely defrost food. c. Use correct cooking time, power level. d. Turn or stir food.
Overcooked foods	Cooking time, power level is not suitable.	Use correct cooking time, power level.
Undercooked foods	a. Materials to be avoided in microwave oven were used. b. Food is not defrosted completely. c. Oven ventilation ports are restricted. d. Cooking time, power level is not suitable.	a. Use microwave-safe cookware only. b. Completely defrost food. c. Check to see that oven venti lation ports are not restricted. d. Use correct cooking time, power level.
Improper defrosting	a. Materials to be avoided in microwave oven were used. b. Cooking time, power level is not suitable. c. Food is not turned or stirred.	a. Use microwave-safe cookware only. b. Use correct cooking time, power level. c. Turn or stir food.

Product Registration

Product Registration Has Benefits :

Thank you for purchasing your new CONTOURE product!

By completing product registration you are protecting your new investment and obtaining important warranty service information unique to your product.

Registration also allows you to confirm ownership of your product by using registration as an official method of proof of purchase.

When registering your product you can choose to become a member of the CONTOURE team to receive exciting new product notifications, product use tips, unique product features and the latests updates and downloads about CONTOURE products and services.

Register your CONTOURE Product:

We recommend that you visit our website, **https://www.contoureusa.com/contoureproductregistration** for a fast, efficient way to register your product online.

If you need help registering your product, or do not have access to the internet, a Customer Service Representative will assist you.

You may contact our Consumer Service Center toll-free at 1-888-656-9317.

Please maintain your original proof of purchase for product registration and warranty service.

Product Warranty

This warranty is available to consumers only. You are a consumer if you own a CONTOURE product that was purchased at a retail store for personal, family or household use. Except as otherwise required under applicable law, this warranty is not available to retailers or other commercial purchasers or owners.

Warranty registration is not mandatory, but doing so will help us to service you more quickly if you need to present a warranty claim or notify you if there is a product recall. Please go online to submit your product registration form. Return of product registration does not eliminate the need for the consumer to maintain the original proof of purchase in order to obtain the warranty benefits. In the event that you do not have proof of purchase date, the purchase date for warranty purposes will be the date of manufacture.

NQP warrants CONTOURE Products ("product") to be free of all defects in material and workmanship for the applicable period specified below commencing from the date of original purchase. This warranty extends to the original buyer only.

Ninety (90) Day Full Warranty Parts & Labor:

Within ninety (90) days from the date of original purchase, NQP/CONTOURE in its sole discretion, will either repair or replace, free of charge, any part proving defective in material or workmanship.

All warranty repairs and service must be performed at a NQP/CONTOURE location of service by an authorized NQP/CONTOURE technician. All expenses related to replacing or repairing a defective part under this ninety (90) day warranty shall be assumed by NQP/CONTOURE except the cost of transporting the product to and from NQP/CONTOURE, which shall be assumed by the buyer. If the product is replaced, the replacement will be with a product that is identical or equivalent to the warranted product. If the product cannot be repaired or replaced, NQP/CONTOURE will issue a refund to the buyer for the original purchase price less that amount directly attributable to use by the buyer.

Disclaimer of implied warranties; limitation of remedies:

Customer's sole and exclusive remedy under this limited warranty shall be product repair or replacement as provided herein. Claims based on implied warranties, including warranties of merchantability or fitness for a particular purpose, are limited to one year or the shortest period allowed by law, but not less than one year. NQP/CONTOURE shall not be liable for consequential or incidental damages such as property damage and incidental expenses resulting from any breach of this written limited warranty or any implied warranty. Some states and provinces do not allow the exclusion or limitation of incidental or consequential damage or limitations on the duration of implied warranties, so these limitations or exclusions may not apply to you. This written warranty gives you specific legal rights. You may also have other rights that vary from state to state.

One (1) Year Limited Warranty:

After the expiration of the ninety (90) day warranty, and within one (1) year from the date of original purchase, NQP/CONTOURE NQP will replace any part proving defective in material or workmanship with a product that is identical or equivalent to the warranted part. The buyer shall assume the cost of transporting the

Product Warranty

defective product to and from NQP/CONTOURE and will assume the cost of labor associated with repair.

How to Obtain Warranty Service:

Upon discovery of any defect, malfunction, or nonconformity in the warranty-covered product, the buyer should visit www.contoureusa.com and submit a warranty claim online.

For any questions regarding your warranty you may also email us at warranty@contoureusa.com

Notice to Buyer:

This warranty gives the buyer specific legal rights, and the buyer may also have other rights, which vary from state to state. You have the right to bring any action at law or equity to resolve disputes concerning or to enforce the provisions of this warranty. Every implied warranty, including any statutory warranty or condition of merchantability or fitness for a particular purpose, is disclaimed except to the extent prohibited by law, in which case such warranty or condition is limited to the duration and extent of this written warranty.

For added protection and secure handling of any CONTOURE product that is being returned, we recommend that you use a traceable, insured delivery service. NQP/CONTOURE cannot be held responsible for in-transit damage or for packages that are not delivered to us. Lost and/or damaged products are NOT covered under warranty. Please be sure to include your return address, daytime phone number, description of the product defect, product model number (located on the product), original date of purchase and any additional pertinent information pertaining to the product's return.

Warranty Exclusions:

This warranty does not apply to any costs, repairs or services for the following:

- Products with original serial numbers that have been removed, altered or cannot be readily determined or products purchased "as-is."
- Product that has been transferred from its original owner to another party or removed outside of the USA or Canada.
- Products used in commercial setting(s).
- Service calls to correct the installation of the warranty-covered products, to explain the usage of the product to the buyer, or to reset or replace home circuit breakers or fuses.
- Service calls which do not involve malfunction or defects in materials or workmanship, or for appliances not in ordinary household use or used other than in accordance with the provided instructions.
- Repairs necessitated by use other than normal home use / Products used in commercial settings.
- Damage resulting from misuse, abuse, accidents, alterations, improper installation, fire, flood acts of God or damage caused by the shipping of the product by the buyer to NQP.
- Corrective work necessitated by repairs made by anyone other than a NQP authorized service technician / Rust on the interior or exterior of the unit.
- Costs incurred for disposing of the product at locations other than a NQP facility.

- Expenses for making the appliance accessible for servicing, such as removal of trim, cupboards, shelves, etc. which are not a part of the appliance when it is shipped from the factory.
- Damages to the finish of appliance or home incurred during installation, including but not limited to floors, cabinets, walls, etc.
- Damages caused by: services performed by unauthorized service companies; use of parts other than genuine CONTOURE parts or parts obtained from persons other than authorized service companies; or external causes such as abuse, misuse, inadequate power supply, accidents, fires or acts of God.
- Labor costs after ninety (90) days from your original date of purchase incurred for product repair or replacement as provided herein for carry-in appliances.

This Warranty Only Applies in the USA and Canada:

In the United States and Canada, your appliance is warranted by NQP/CONTOURE. NQP/CONTOURE authorizes no person to change or add any obligations under this warranty. Obligations for service and parts under this warranty must be performed by NQP/CONTOURE or an authorized service company.

California Residents Only:

California law provides that for In-Warranty Service, California residents have the option of returning a nonconforming product.

(1) to the store where it was purchased or (2) to another retail store which sells CONTOURE products of the same type. The retail store shall then, at its discretion, either repair the product, refer the consumer to an independent repair facility, replace the product, or refund the purchase price less the amount directly attributable to the consumer's prior usage of the product. If the above two options do not result in the appropriate relief to the consumer, the consumer may then take the product to an independent repair facility if service or repair can be economically accomplished.

NQP/CONTOURE and not the consumer will be responsible for the reasonable cost of such service, repair, replacement, or refund for nonconforming products under warranty.

California residents may also, according to their preference, return nonconforming products directly to NQP for repair, or if necessary, replacement, by calling our Consumer Service Center toll-free at 1-888-656-9317 or sending us an email, warranty@contoureusa.com.

NQP/CONTOURE will be responsible for the cost of the repair, replacement, and return shipping and handling for such products under warranty.

Copyright:

CONTOURE is a trademark of National Quality Products, LLC and its affiliated companies.

Registered in some countries.

Distributed by National Quality Products, LLC.

©2026 National Quality Products, LLC. All rights reserved.

CONTOURE®

SPACE SAVER APPLIANCES

VISIT **WWW.CONTOUREUSA.COM** FOR MORE