11822 00-04 VOLVO S40 & V40

11/13/2017

GROSS LOAD CAPACITY WHEN USED AS A WEIGHT CARRYING HITCH: 2,000 LBS. TRAILER WEIGHT & 200 LBS. TONGUE WEIGHT.
*****DO NOT EXCEED VEHICLE MANUFACTURER'S RECOMMENDED TOWING CAPACITY.*****
WARNING: ALL NON-TRAILER LOADS APPLIED TO THIS PRODUCT MUST BE SUPPORTED BY AUXILIARY STABILIZING STRAPS.
**** FAILURE TO PROPERLY SUPPORT NON-TRAILER LOADS WILL VOID PRODUCT WARRANTY****
HAVING INSTALLATION QUESTIONS? CALL TECHNICAL SUPPORT AT 1-800-798-0813

Parts List			
ITEM	QTY	PART NUMBER	DESCRIPTION
1	1	7_16 - 14 x 1.75" x 1.00" C-C	U-BOLT
2	6	7/16-14	HEX FLANGE NUT
3	4	CM-SP1	.250 x 1.50 x 2.00" SQUARE HOLE SPACER
4	4	7/16-14 x 1 1/2	CARRIAGE BOLT

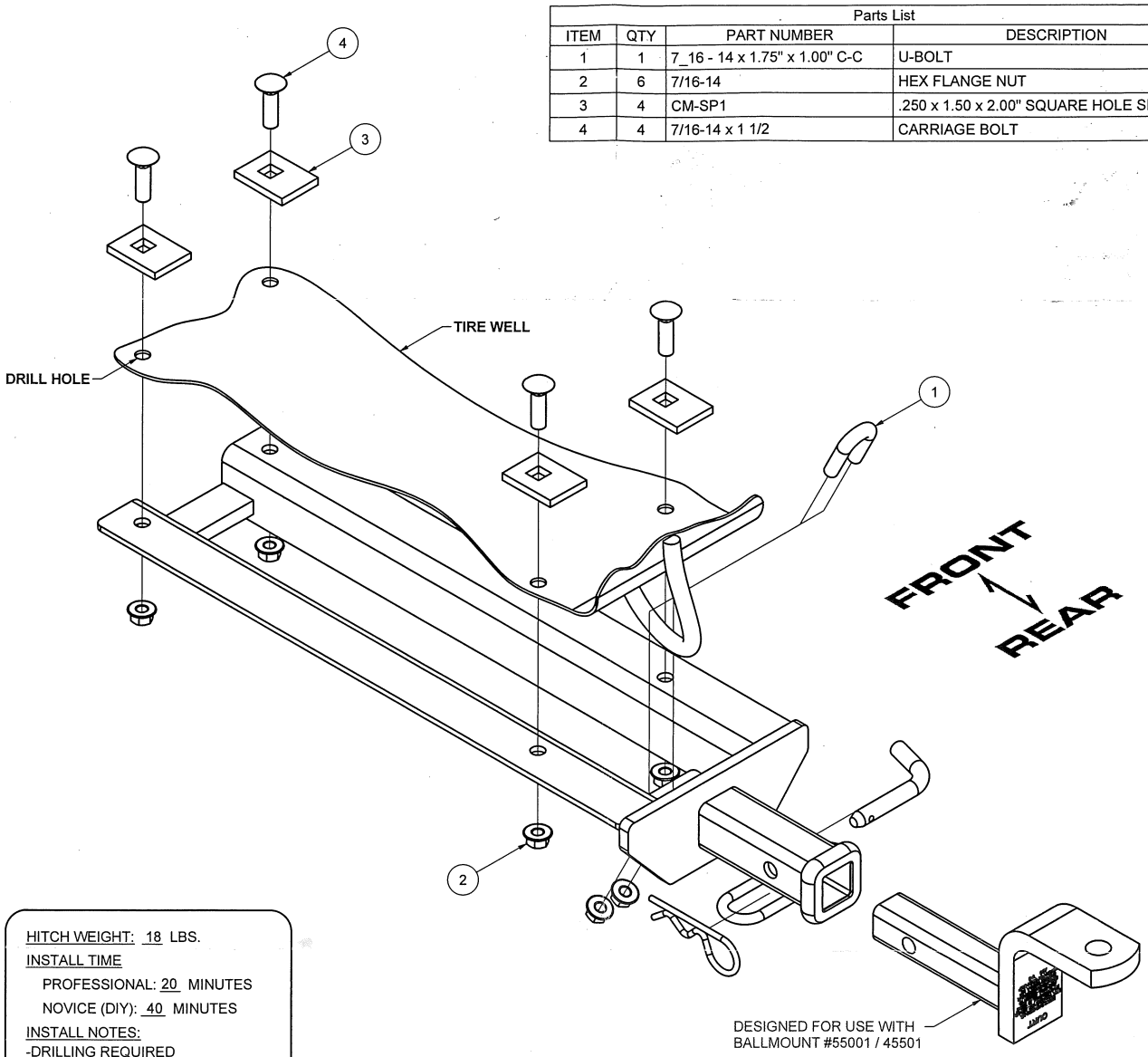

HITCH WEIGHT: 18 LBS.
INSTALL TIME
PROFESSIONAL: 20 MINUTES
NOVICE (DIY): 40 MINUTES
INSTALL NOTES:
-DRILLING REQUIRED

INSTALLATION STEPS

1. Mount hitch as shown fastening at car's tow loop using U-bolt. Do not use impact wrench on U-bolt.
2. Use hitch as a drill template and drill four holes through tire well floor.
3. Install fasteners as shown.
4. Torque all hardware to 70 lb.-ft.

PERIODICALLY CHECK THIS RECEIVER HITCH TO ENSURE THAT ALL FASTENERS ARE TIGHT AND THAT ALL STRUCTURAL COMPONENTS ARE SOUND.

Curt Manufacturing Inc., warrants this product to be free of defects in material and/or workmanship at the time of retail purchase by the original purchaser. If the product is found to be defective, Curt Manufacturing Inc., may repair or replace the product, at their option, when the product is returned, prepaid, with proof of purchase. Alteration to, misuse of, or improper installation of this product voids the warranty. Curt Manufacturing Inc.'s liability is limited to repair or replacement of products found to be defective, and specifically excludes liability for incidental or consequential loss or damage.