13275 DODGE SPRINTER (CAB & CHASSIS) 170" WB

7/30/2020

VISIT **WWW.HITCHINFO.COM** FOR CURRENT APPLICATION COVERAGE,
INSTALLATION SUPPORT AND BENEFICIAL TOWING INFORMATION

GROSS LOAD CAPACITY WHEN USED AS A WEIGHT CARRYING HITCH: 6,000 LBS. TRAILER WEIGHT & 600 LBS. TONGUE WEIGHT.
GROSS LOAD CAPACITY WHEN USED AS A WEIGHT DISTRIBUTION HITCH: 10,000 LBS. TRAILER WEIGHT & 1,000 LBS. TONGUE WEIGHT

*****DO NOT EXCEED VEHICLE MANUFACTURER'S RECOMMENDED TOWING CAPACITY.*****

1	8	10-10510	HHCS,7/16-14 UNC,4,GRD8,YZ
2	8	30-00166	WASHER,FLAT,7/16,YZ
3	8	20-00103	NUT,SER-FLANGE,7/16-14 UNC,GRD8,YZ
4	1	1_2 FISHWIRE	1/2" FISHWIRE
5	2	10-10287	BOLT,CAR,1/2-13 UNC,1-1/2,GRD8,YZ
6	2	CM-SP6	.250 x 1.00 x 3.00" SQUARE HOLE SPACER
7	2	20-00062	NUT, SER-FLANGE,1/2-13 UNC,GRD8,YZ

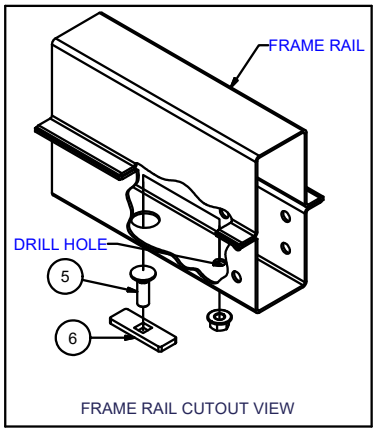

FRAME RAIL CUTOUT VIEW

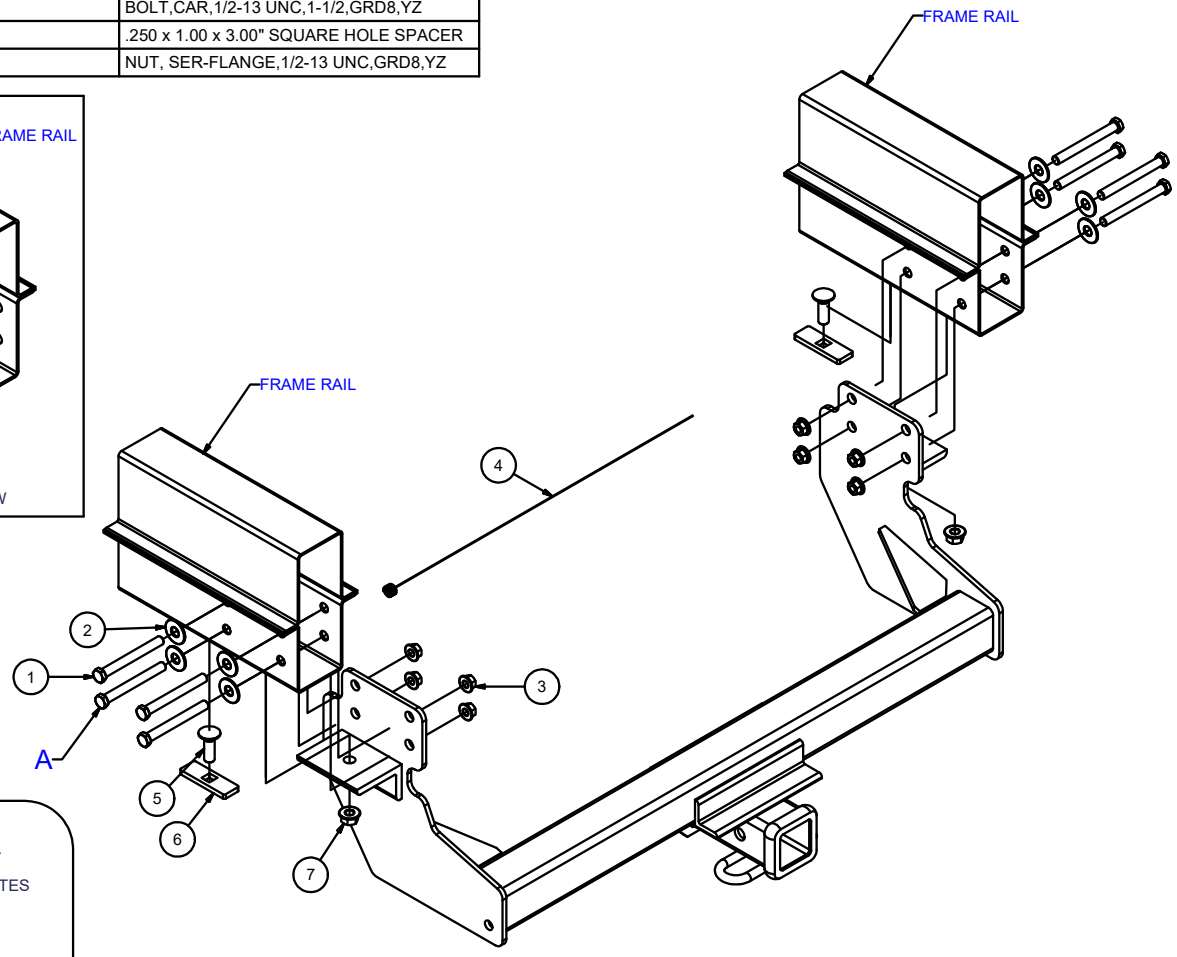

HITCH WEIGHT: 42 LBS.

INSTALL TIME: 30 MINUTES

INSTALL NOTES:

- DRILLING REQUIRED
- FISHWIRING REQUIRED

INSTALLATION STEPS

1) Raise hitch into position aligning holes.

2) Secure to frame using hardware supplied with the exception of bottom front most bolts (A).(TYPICAL BOTH SIDES)

3) Using hitch as template, drill holes into bottom of frame.

4) Fishwire spacer and carraige bolt through frame.

5) Install remaining hardware.

6) Torque all 7/16" hardware to 70 lb-ft. and all 1/2" hardware to 110 lb-ft.

PERIODICALLY CHECK THIS RECEIVER HITCH TO ENSURE THAT ALL FASTENERS ARE TIGHT AND THAT ALL STRUCTURAL COMPONENTS ARE SOUND.

Curt Manufacturing Inc., warrants this product to be free of defects in material and/or workmanship at the time of retail purchase by the original purchaser. If the product is found to be defective, Curt Manufacturing Inc., may repair or replace the product, at their option, when the product is returned, prepaid, with proof of purchase. Alteration to, misuse of, or improper installation of this product voids the warranty. Curt Manufacturing Inc.'s liability is limited to repair or replacement of products found to be defective, and specifically excludes liability for incidental or consequential loss or damage.